Project Title :SRI RANJIT YADAV

| | |
|---|---|
| AREA STATEMENT: DHANBAD MUNICIPAL CORPORATION | VERSION NO.: 1.0.17 |
| | VERSION DATE: 01/01/2019 |
| PROJECT DETAIL : | |
| Inward_No : - | Plot Use : Residential |
| Region : JHARKHAND URBAN LOCAL BODIES | Plot SubUse : Bungalow/ Dwelling / Non Apartment |
| District : DHANBAD | Land Use Zone : Residential |
| Application Type : General Proposal | Abutting Road Width : - |
| Project Type : Building Permission | Plot No. : - |
| Nature of Development : New | Revenue Survey No/Survey No : - |
| Location : Old Area | Thana No : - |
| Sub Location : NA | Holding No : - |
| Village/Mauza Name : - | Khata No : - |
| Ward No : - | North : - |
| Road/Street : - | South : - |
| | East : - |
| | West : - |

| AREA DETAILS : | | SQ.MT. |
|---|---|---|
| AREA OF PLOT (Minimum) | (A) | 127.73 |
| Net Plot Area (Gross Plot Area - Deduction from Gross Plot area) | (A-Deductions) | 127.73 |
| Deductions for Balance Plot Area (from Gross Plot Area) | | |
| COP Area | | 17.33 |
| Total | | 17.33 |
| Balance Plot Area (Net Plot Area - Recreational/Amenity space) | (A-Deductions) | 110.39 |
| Plot Area for Coverage (Net Plot Area) | (A-Deductions) | 127.73 |
| Plot Area for FSI (Net Plot Area + Road/Widening Area) | (A-Deductions) | 127.73 |
| COVERAGE CHECK | | |
| Proposed Coverage Area ( 55.41 % ) | | 70.78 |
| Total Coverage Area ( 55.41 % ) | | 70.78 |
| FAR CHECK | | |
| Proposed Area of FAR | | 141.56 |
| Total Area of FAR | | 141.56 |
| BUILT UP AREA CHECK | | |
| Total Proposed BuiltUp Area | | 141.56 |

| | |
|---|---|
| ARCH / ENGG / SUPERVISOR (Regd) | OWNER |
| DEVELOPMENT AUTHORITY | LOCAL BODY |

## COLOR INDEX

- PLOT BOUNDARY
- ABUTTING ROAD
- PROPOSED WORK (COVERAGE AREA)
- EXISTING (To be retained)
- EXISTING (To be demolished)

Color Index:

MARGIN DETAIL:

| Building / Wing Name | Road Name | Front Margin | Rear Margin | Side1 Margin | Side2 Margin |
|---|---|---|---|---|---|
| A-1 (S) | 4.87M WIDE ROAD | 3.11 | 1.80 | 0.92 | 0.00 |

FAR & Tenement Details (Table 4c-1)

| Building | No. of Same Bldg | Total Built Up Area (Sq.mt.) | Proposed FAR Area (Sq.mt.) Resi. | Total FAR Area (Sq.mt.) | Tnmt (No.) |
|---|---|---|---|---|---|
| A (S) | 1 | 141.56 | 141.56 | 141.56 | 01 |
| Grand Total : | 1 | 141.56 | 141.56 | 141.56 | 01 |

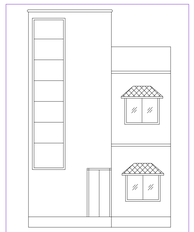

FRONT ELEVATION

Elevation 1 Detail

LEFT SIDE ELEVATION

Elevation 2 Detail

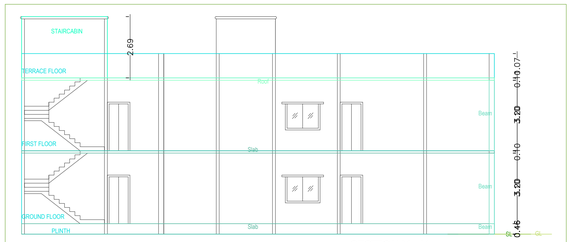


SECTION X-X SECTION Y - Y

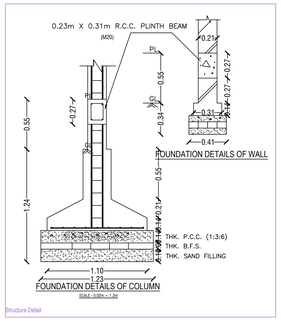


Structure Detail

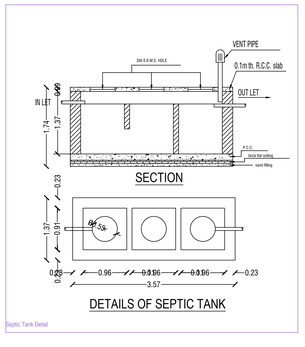


Septic Tank Detail

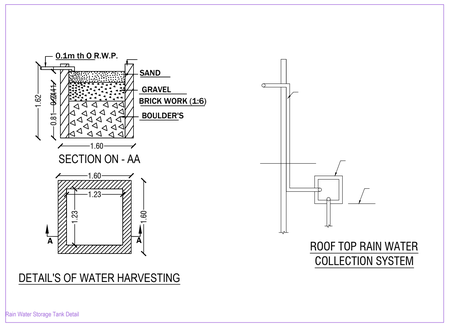


Rain Water Storage Tank Detail

## BRIEF SPECIFICATION

FOUNDATION : 6" th. P.C.C. (1:1½:3) foundation bed & first class brick work in cement mortor (1:6) in foundation.

PLINTH : 1½" th. D.P.C. (1:1½:3) all round on the plinth level.

FLOORING : 1½" th. I.P.S./ Marble flooring over 3" th. P.C.C. (1:3:6).

SUPERSTRUCTURE : First class brick work in cement mortor (1:6).

SLAB, BEAM & LINTEL : All R.C.C. works (1:1½:3).

WOOOD WORKS : All doors & windows frames of sal wood.

PLASTERING : ½" th. cement plaster (1:6) in both side.

STAIR CASE : RISE - 6", TREAD - 10"

## SCHEDULE

| | |
|---|---|
| D1 - 1.07 X 2.13 | W - 0.9 x 1.22 |
| D2 - 0.9 X 2.13 | W1 - 1.22 x 1.22 |
| D3 - 0.76 x 2.13 | W2 - 1.5 x 1.22 |
| CG - 1.22 x 2.13 | V - 0.61 x 0.61 |

## DETAILS OF AREA

| | |
|---|---|
| LAND AREA | : 133.82 Sq.mtr. (AS PER DEED) 127.73 Sq.mtr. (AVAILABLE) |
| GROUND FLOOR AREA | : 70.78 Sq.mtr. |
| FIRST FLOOR AREA | : 70.78 Sq.mtr. |
| COVERED AREA | : 141.56 Sq.mtr. |
| F.A.R | : 1.10 |
| % OF PLINTH AREA | : 55.41 % |

## TITLE OF DRAWING

PLAN FOR PROPOSED RESIDENTIAL BUILDING OF SRI RANJIT KUMAR YADAV S/O LATE MAHABIR YADAV ON PLOT NO. 99,100 (new: 115,116) ; KHATA : 123(NEW : 730) ; UNDER MOUZA : KOLAKUSHMA , 12 , IN THE DIST. OF DHANBAD

SIG. OF OWNER | SIG. OF ENGINEER

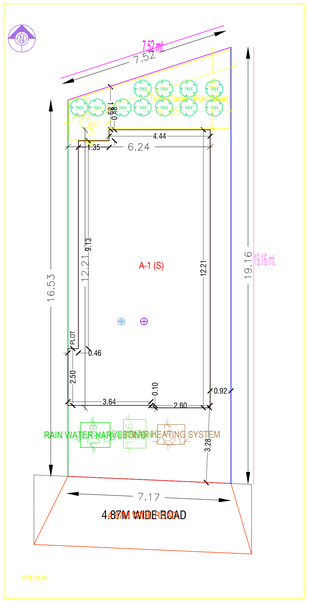


SITE PLAN

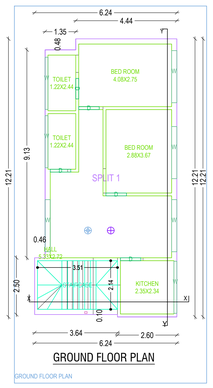


GROUND FLOOR PLAN

GROUND FLOOR PLAN

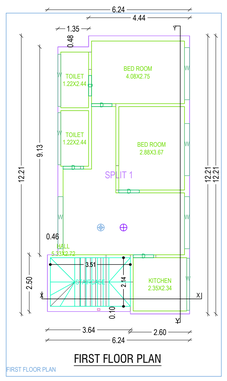


FIRST FLOOR PLAN

FIRST FLOOR PLAN

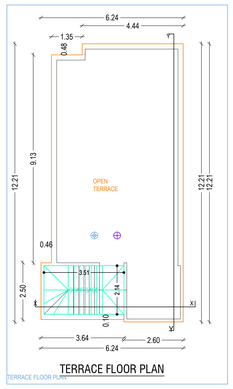


TERRACE FLOOR PLAN

TERRACE FLOOR PLAN

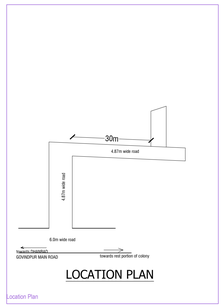


LOCATION PLAN

Location Plan

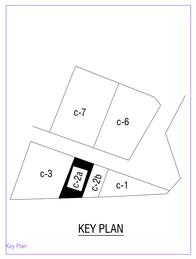


KEY PLAN

Key Plan

A (S)

Building :A (S)

| Floor Name | Total Built Up Area (Sq.mt.) | Proposed FAR Area (Sq.mt.) Resi. | Total FAR Area (Sq.mt.) | Tnmt (No.) |
|---|---|---|---|---|
| Ground Floor... | 70.78 | 70.78 | 70.78 | 01 |
| First Floor... | 70.78 | 70.78 | 70.78 | 00 |
| Terrace Floor... | 0.00 | 0.00 | 0.00 | 00 |
| Total : | 141.56 | 141.56 | 141.56 | 01 |
| Total Number of Same Buildings | 1 | | | |
| Total : | 141.56 | 141.56 | 141.56 | 01 |

SCHEDULE OF JOINERY:

| BUILDING NAME | NAME | LENGTH | HEIGHT | NOS |
|---|---|---|---|---|
| A (S) | D | 0.90 | 2.10 | 10 |
| Total | - | - | - | 10 |

SCHEDULE OF JOINERY:

| BUILDING NAME | NAME | LENGTH | HEIGHT | NOS |
|---|---|---|---|---|
| A (S) | W | 2.29 | 1.20 | 14 |
| Total | - | - | - | 14 |

UnitBUA Table for Building :A (S)

| FLOOR | Name | UnitBUA Type | UnitBUA Area | Carpet Area | No. of Rooms | No. of Tenement |
|---|---|---|---|---|---|---|
| GROUND FLOOR PLAN | SPLIT 1 | FLAT | 141.55 | 141.53 | 6 | 1 |
| Total | - | - | 141.55 | 141.53 | 12 | 1 |