Project Title :vibha sharma

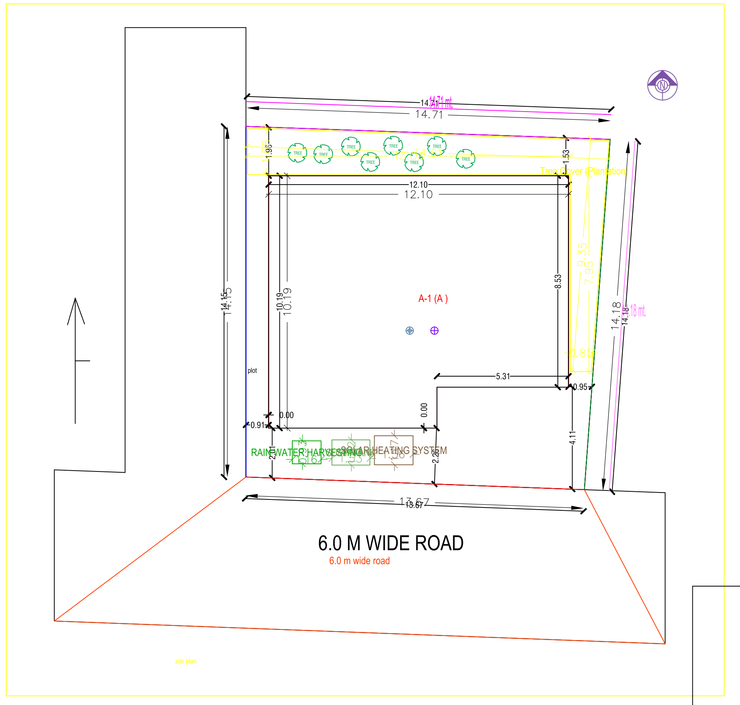

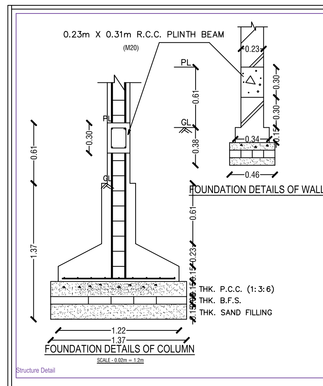

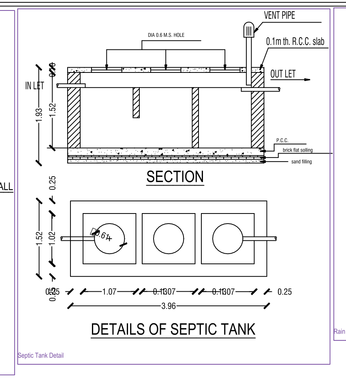

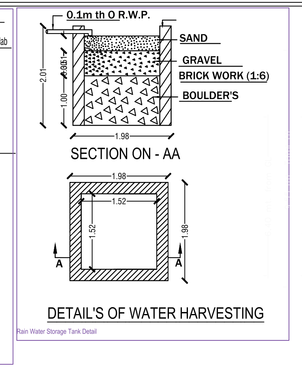

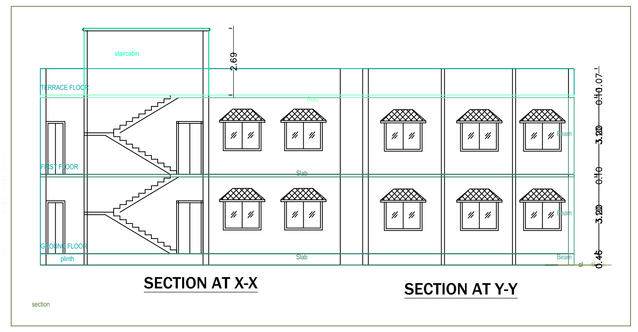

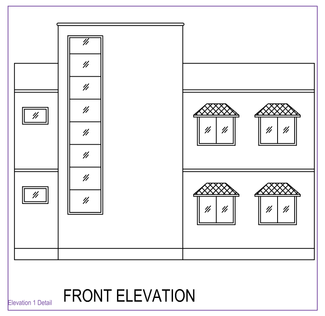

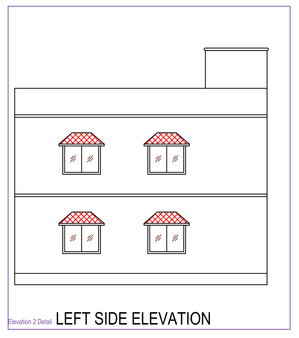

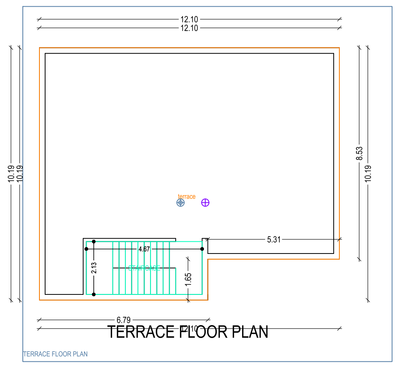

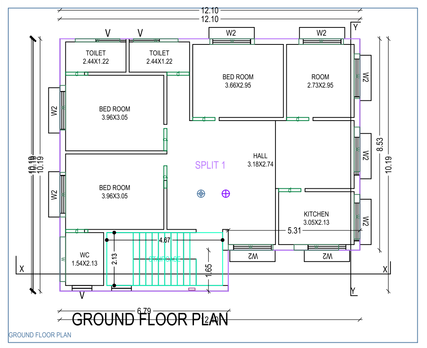

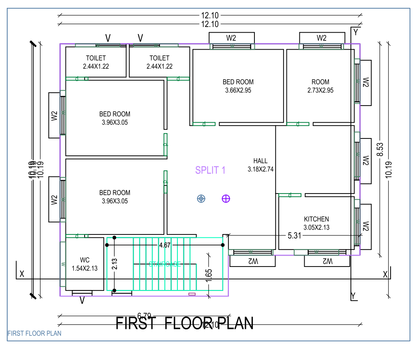

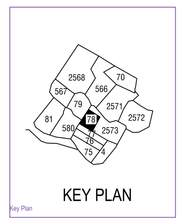

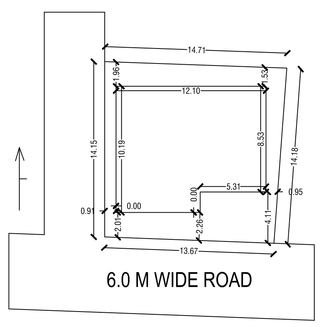

SITE PLAN

BRIEF SPECIFICATION

FOUNDATION :- R.C.C. (1:1.5:3) Column footing foundation.

PLINTH :- 12"th R.C.C. (1:1.5:3) all round on plinth level.

FLOORING :- 1.5"th Marble. flooring over 3"th P.C.C. (1:3:6).

SUPER STRUCTURE :- First class brick work in cement mortar (1:6).

SLAB,BEAM, stairs & LINTEL :- All R.C.C. work (1:1.5:3).

WOOD WORK :- All door & window frames of sal wood

PLASTERING :- 12mm cement plaster (1:6) both side.

SCHEDULE

D1 - 1.07 X 2.13	W - 0.9 x 1.22
D2 - 0.9 X 2.13	W1 - 1.22 x 1.22
D3 - 0.76 x 2.13	W2 - 1.5 x 1.22
CG - 1.22 x 2.13	V - 0.61 x 0.61

DETAILS OF AREA

1).LAND AREA :- 200.84 SQM
2).GROUND FLOOR AREA :- 114.52 SQM
3). FIRST FLOOR AREA :- 114.52 SQM

4).COVERED AREA :- 229.04 SQM
5).% OF PLINTH AREA :- 57.02
6).F.A.R :- 1.14

TITLE OF DRAWING

PROPOSED RESIDENTIAL BUILDING PLAN OF SMT VIBHA SHARMA W/O SRI SRI ASHOK KUMAR SHARMA , UNDER MOUZA : BHELATAND , 89 KHATA NO.- 5 (NEW 119) ; PLOT NO. -2578 (NEW : 2927) , IN THE DISTRICT OF DHANBAD .

SIG. OF OWNER

SIG. OF ENGINEER

HAPPY HOME DESIGNER & CONSTRUCTION CENTER
HIRAPUR, DHANBAD
MB. NO. -9431315330, PH. NO- 0326- 2311521

AREA STATEMENT: DHANBAD MUNICIPAL CORPORATION	VERSION NO.: 1.0.17	
	VERSION DATE: 01/01/2019	
PROJECT DETAIL :		
Inward_No :	Plot Use : Residential	
Region : JHARKHAND URBAN LOCAL BODIES	Plot SubUse : Bungalow Dwelling / Non Apartment	
District : DHANBAD	Land Use Zone : Residential	
Application Type : General Proposal	Abutting Road Width : -	
Project Type : Building Permission	Plot No. : -	
Nature of Development : New	Revenue Survey No/Survey No : -	
Location : Old Area	Thana No : -	
Sub Location : NA	Holding No : -	
Village/Mauza Name : -	Khata No : -	
Ward No : -	North : -	
Road/Street : -	South : -	
	East : -	
	West : -	

AREA DETAILS :		SQ.MT.
AREA OF PLOT (Minimum)	(A)	200.84
Net Plot Area (Gross Plot Area - Deduction from Gross Plot area)	(A-Deductions)	200.84
Deductions for Balance Plot Area (from Gross Plot Area)		
COP Area		32.93
Total		32.93
Balance Plot Area (Net Plot Area - Recreational/Amenity space)	(A-Deductions)	167.91
Plot Area for Coverage (Net Plot Area)	(A-Deductions)	200.84
Plot Area for FSI (Net Plot Area + Road/Widening Area)	(A-Deductions)	200.84
COVERAGE CHECK		
Proposed Coverage Area (57.02 %%%%)		114.52
Total Coverage Area (57.02 %%%%)		114.52
FAR CHECK		
Proposed Area of FAR		229.04
Total Area of FAR		229.04
BUILT UP AREA CHECK		
Total Proposed BuiltUp Area		229.04
ARCH / ENGG / SUPERVISOR (Regd)		OWNER
DEVELOPMENT AUTHORITY		LOCAL BODY

COLOR INDEX

- PLOT BOUNDARY
- ABUTTING ROAD
- PROPOSED WORK (COVERAGE AREA)
- EXISTING (To be retained)
- EXISTING (To be demolished)

Color Index:

MARGIN DETAIL:

Building / Wing Name	Road Name	Front Margin	Rear Margin	Side1 Margin	Side2 Margin
A-1 (A)	6.0 m wide road	2.01	1.53	0.91	0.94

FAR & Tenement Details (Table 4c-1)

Building	No. of Same Bldg	Total Built Up Area (Sq.mt.)	Proposed FAR Area (Sq.mt.) Resi.	Total FAR Area (Sq.mt.)	Tnmt (No.)
A (A)	1	229.04	229.04	229.04	01
Grand Total :	1	229.04	229.04	229.04	01

Building :A (A)

Floor Name	Total Built Up Area (Sq.mt.)	Proposed FAR Area (Sq.mt.) Resi.	Total FAR Area (Sq.mt.)	Tnmt (No.)
Ground Floor...	114.52	114.52	114.52	01
First Floor...	114.52	114.52	114.52	00
Terrace Floor...	0.00	0.00	0.00	00
Total :	229.04	229.04	229.04	01
Total Number of Same Buildings :	1			
Total :	229.04	229.04	229.04	01

SCHEDULE OF JOINERY:

BUILDING NAME	NAME	LENGTH	HEIGHT	NOS
A (A)	d	0.90	2.10	16
Total :	-	-	-	16

SCHEDULE OF JOINERY:

BUILDING NAME	NAME	LENGTH	HEIGHT	NOS
A (A)	W	1.80	1.20	24
Total :	-	-	-	24

UnitBUA Table for Building :A (A)

FLOOR	Name	UnitBUA Type	UnitBUA Area	Carpet Area	No. of Rooms	No. of Tenement
GROUND FLOOR PLAN	SPLIT 1	FLAT	229.04	229.00	9	1
Total :	-	-	229.04	229.00	18	1