Project Title :SMT MAMTA DEVI

DATE	18-02-2020
SHEET NO.	1
	.

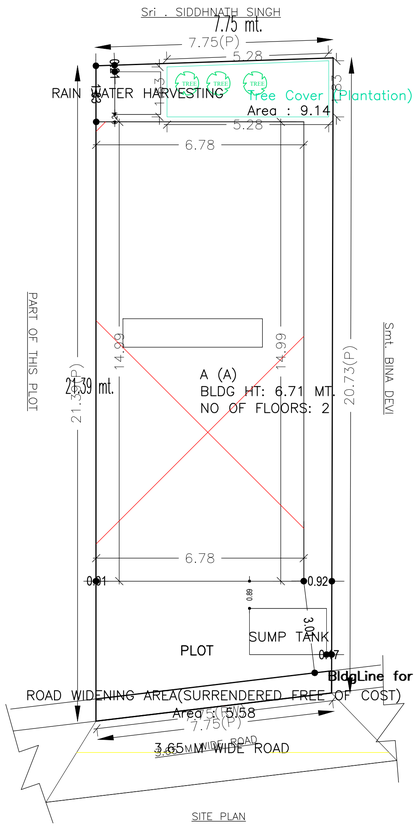

SITE PLAN

SITE PLAN

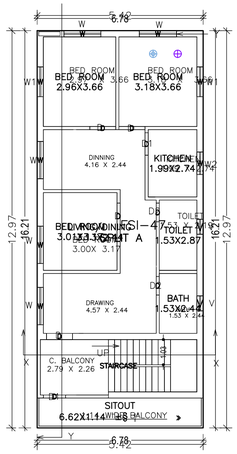

FIRST FLOOR PLAN

FIRST FLOOR PLAN (Proposed) (SCALE 1:100)

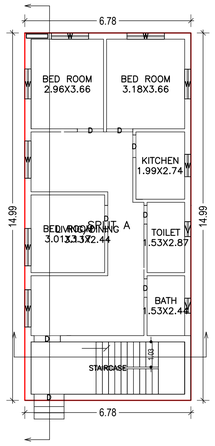

GROUND FLOOR PLAN (Proposed) (SCALE 1:100)

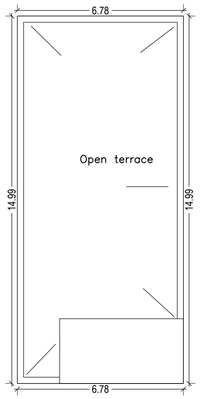

TERRACE FLOOR PLAN (SCALE 1:100)

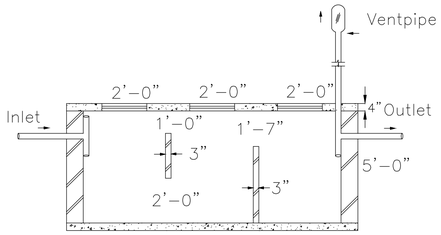

SECTION ON – YY

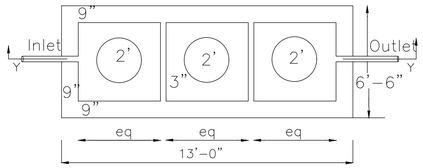

DETAILS OF SEPTIC TANK

Building USE/SUBUSE Details

Building Name	Building Use	Building SubUse	Building Structure
A (A)	Residential	Bungalow/ Dwelling / Non Apartment	Non-Highrise

FAR & Tenement Details (Table 4c–1)

Building	No. of Same Bldg	Total Built Up Area (Sq.mt.)	Proposed FAR Area (Sq.mt.) Resi.	Total FAR Area (Sq.mt.)	Total Consumed Additional FAR Area (Sq.mt.)	Tnmt (No.)
A (A)	1	211.44	211.44	211.44	211.44	01
Grand Total :	1	211.44	211.44	211.44	211.44	01

Proposal Basic Information

Proposal File No.	DMC/BP/0280/W20/2019
Owner Name	SMT MAMTA DEVI
Khata No	32 NEW 216
Plot No	258 NEW 569
Village Name	Bisanpur
Use	Residential
SubUse	Bungalow/ Dwelling / Non Apartment

KEY PLAN

Buildingwise Floor FAR Details

Floor Name	Building Name A (A) Proposed Built Up Area (Sq.mt.)	Proposed FAR Area (Sq.mt.)	Total Total Proposed Built Up Area (Sq.mt.)	Total FAR Area (Sq.mt.)
Ground Floor	101.59	101.59	101.59	101.59
First Floor	109.85	109.85	109.85	109.85
Terrace Floor	0.00	0.00	0.00	0.00
Total :	211.44	211.44	211.44	211.44

COLOR INDEX
PLOT BOUNDARY
ABUTTING ROAD
PROPOSED CONSTRUCTION
COMMON PLOT
ROAD WIDENING AREA
EXISTING (To be retained)
EXISTING (To be demolished)

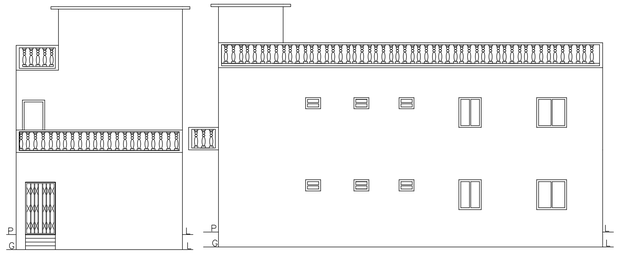

FRONT ELEVATION

RIGHT SIDE ELEVATION

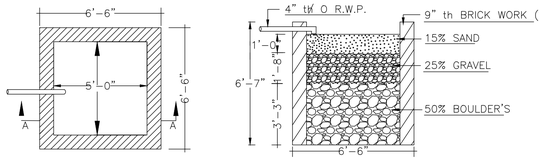

PLAN

SECTION ON – AA

DETAILS OF WATER HARVESTING

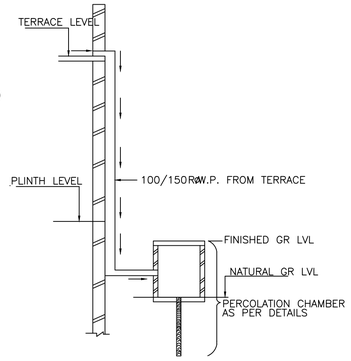

ROOF TOP RAIN WATER COLLECTION SYSTEM

SCHEDULE OF DOOR:

BUILDING NAME	NAME	LENGTH	HEIGHT	NOS
A (A)	D	0.75	2.10	02
A (A)	D	0.76	2.10	02
A (A)	D	0.91	2.10	03
A (A)	D	1.07	2.10	08

SCHEDULE OF WINDOW/VENTILATION:

BUILDING NAME	NAME	LENGTH	HEIGHT	NOS
A (A)	V	0.61	1.20	04
A (A)	W	0.91	1.20	02
A (A)	W	1.22	1.20	04
A (A)	W	1.51	1.20	02
A (A)	W	1.52	1.20	08

UnitBUA Table for Building :A (A)

FLOOR	Name	UnitBUA Type	UnitBUA Area	Carpet Area	No. of Rooms	No. of Tenement
GROUND FLOOR PLAN	SPLIT A	FLAT	211.45	211.16	7	1
FIRST FLOOR PLAN	SPLIT A	FLAT	0.00	0.00	8	0
Total:	-	-	211.45	211.16	15	1

Building :A (A)

Floor Name	Total Built Up Area (Sq.mt.)	Proposed FAR Area (Sq.mt.) Resi.	Total FAR Area (Sq.mt.)	Total Consumed Additional FAR Area (Sq.mt.)	Tnmt (No.)
Ground Floor	101.59	101.59	101.59	101.59	01
First Floor	109.85	109.85	109.85	109.85	00
Terrace Floor	0.00	0.00	0.00	0.00	00
Total :	211.44	211.44	211.44	211.44	01
Total Number of Same Buildings :	1				
Total :	211.44	211.44	211.44	211.44	01

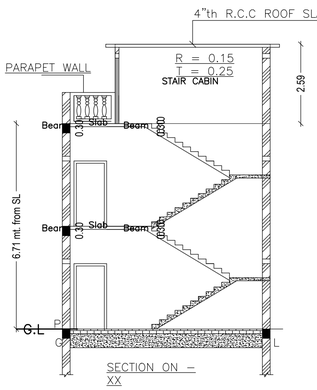

SECTION ON – XX

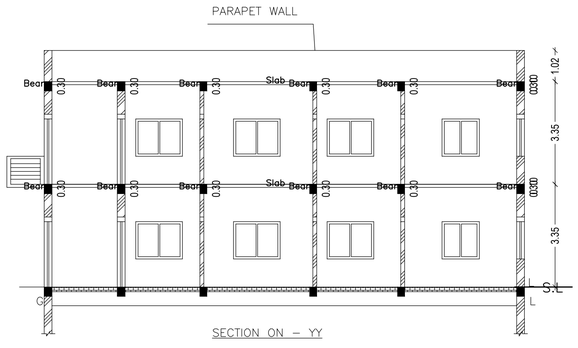

SECTION ON – YY

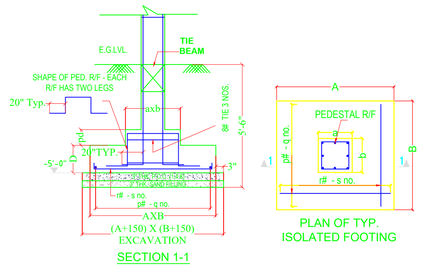

DETAILS OF COLUMN FOOTING

AREA STATEMENT DHANBAD MUNICIPAL CORPORATION	VERSION NO.: 1.0.43
	VERSION DATE: 29/04/2019
PROJECT DETAIL:	
Region: JHARKHAND URBAN LOCAL BODIES	Plot Use: Residential
District: DHANBAD	Plot SubUse: Bungalow/ Dwelling / Non Apartment
Authority: DHANBAD MUNICIPAL CORPORATION	PlotNearbyReligiousStructure: NA
Inward_No: DMC/BP/0280/W20/2019	Plot/SubPlot No: 258 NEW 569
Application Type: General Proposal	North: Plot No. - PART OF THIS PLOT
Project Type: Building Permission	South: Plot No. - VEENA DEVI
Nature of Development: New	East: Plot No. - SIDHNATH SINGH
Location of Development Area: Old Area	West: Road Width - 3.66 M WIDE ROAD

AREA DETAILS:		SQ.MT.
AREA OF PLOT (Minimum)	(A)	162.57
Deduction for NetPlot Area		
Surrender Free of Cost		5.58
Total		5.58
NET AREA OF PLOT(Gross Plot Area - Deduction from Gross Plot area)	(A-Deductions)	156.99
Deduction for Balance Plot Area(from Gross Plot Area)		
Surrender Free of Cost		5.58
Common Plot		9.14
Total		14.72
BALANCE AREA OF PLOT(Net Plot Area - Recreational/Amenity space)	(A-Deductions)	147.85
PLOT AREA FOR COVERAGE(Net Plot Area)	(A-Deductions)	156.99
Plot Area for FAR (Net Plot Area + RoadWidening Area)	(A-Deductions)	162.57
COVERAGE CHECK		
Permissible Coverage area (70.00 %)		109.89
Proposed Coverage Area (64.71 %)		101.59
Total Prop. Coverage Area (64.71 %)		101.59
Balance coverage area (5.29 %)		8.30
FAR CHECK		
Perm. FAR Area (1.50)		243.86
Total Perm. FAR area		243.86
Residential FAR		211.45
Proposed FAR Area		211.45
Total Proposed FAR Area		211.45
Consumed FAR (Factor)		1.30
Balance FAR Area		32.41
BUILT UP AREA CHECK		
Total Proposed BuiltUp Area		211.44
ARCHITECT (Regd)		AMARENDRA KUMAR
ENGGINEER (Regd)		
SUPERVISOR (Regd)		
OWNER (Regd)		SMT MAMTA DEVI
DEVELOPMENT AUTHORITY		LOCAL BODY

LTP NAME AND SIGNATURE	STRUCTURAL ENG'S NAME AND SIGNATURE	BUILDER NAME AND SIGNATURE	DIGITAL SIGNATURE
AMARENDRA KUMAR DMC/ENG/0009/2016			

ISO_A1_(841.00_x_594.00_MM)

This is system generated MAP. No need to Physically Signed.