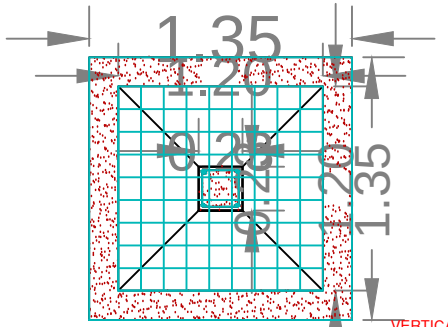

FOUNDATION PLAN

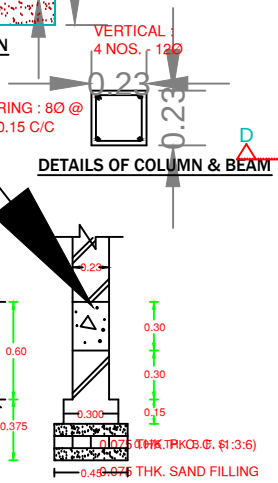

DETAILS OF COLUMN & BEAM

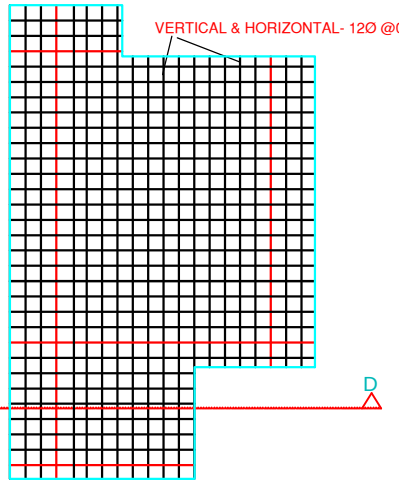

BOTTOM REINFORCEMENT PLAN

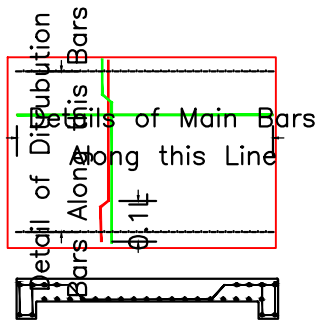

SECTION - D:D

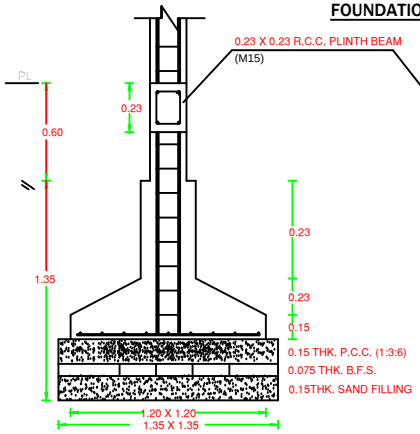

FOUNDATION DETAILS OF COLUMN

FOUNDATION DETAILS OF WALL

Structure Detail

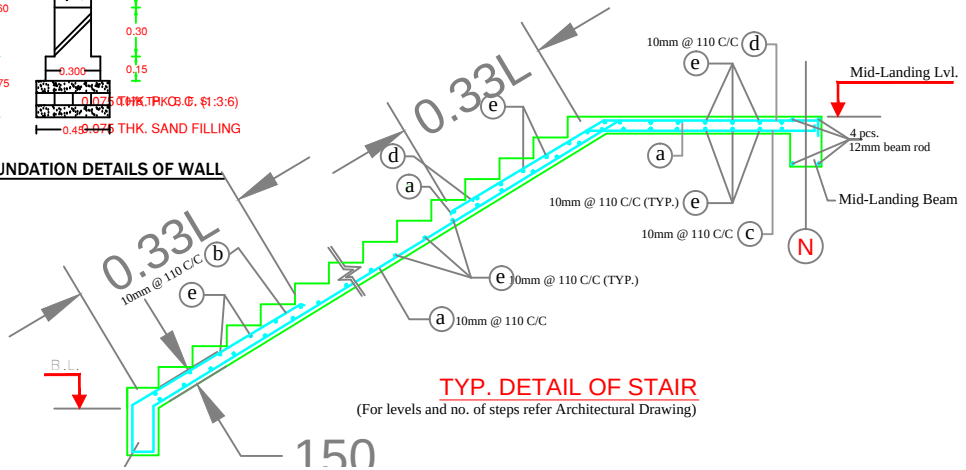

TYP. DETAIL OF STAIR

(For levels and no. of steps refer Architectural Drawing)