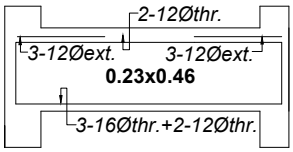

ROOF BEAM

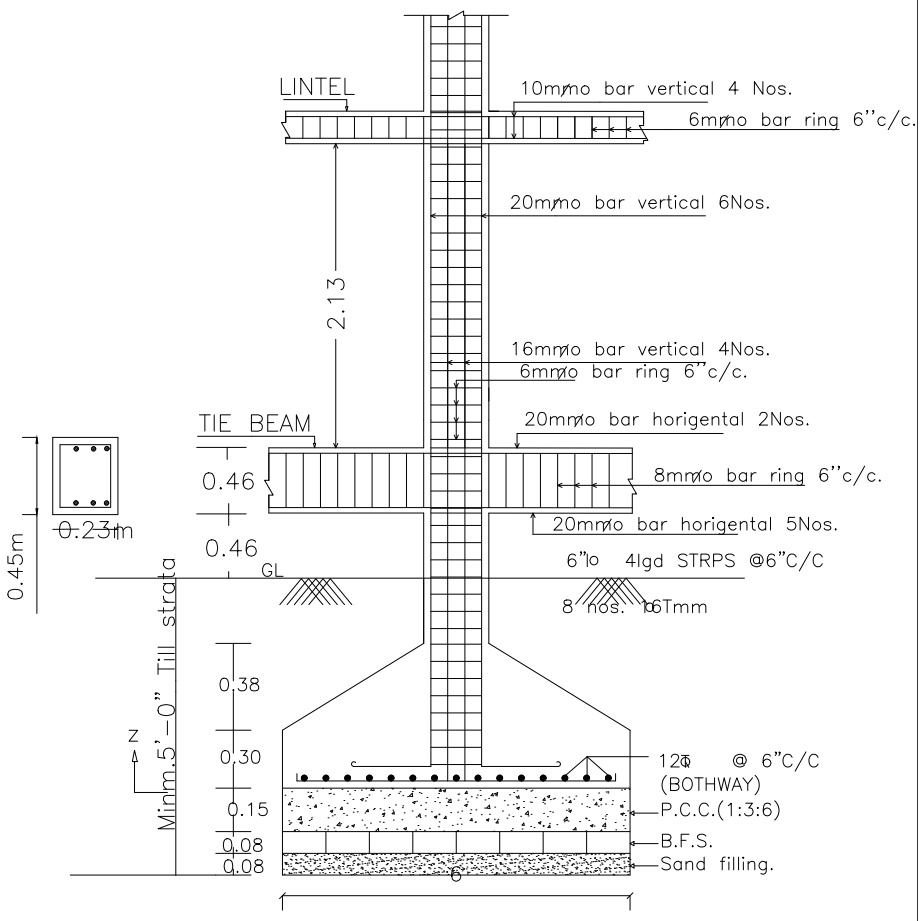

SECTION ON Z-Z

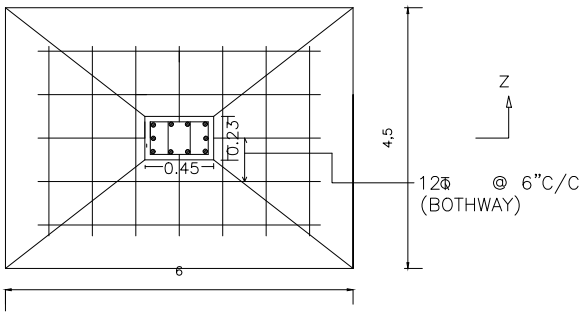

PLAN

DETAIL OF COLUMNS

SCALE:- 1" = 2' - 0"

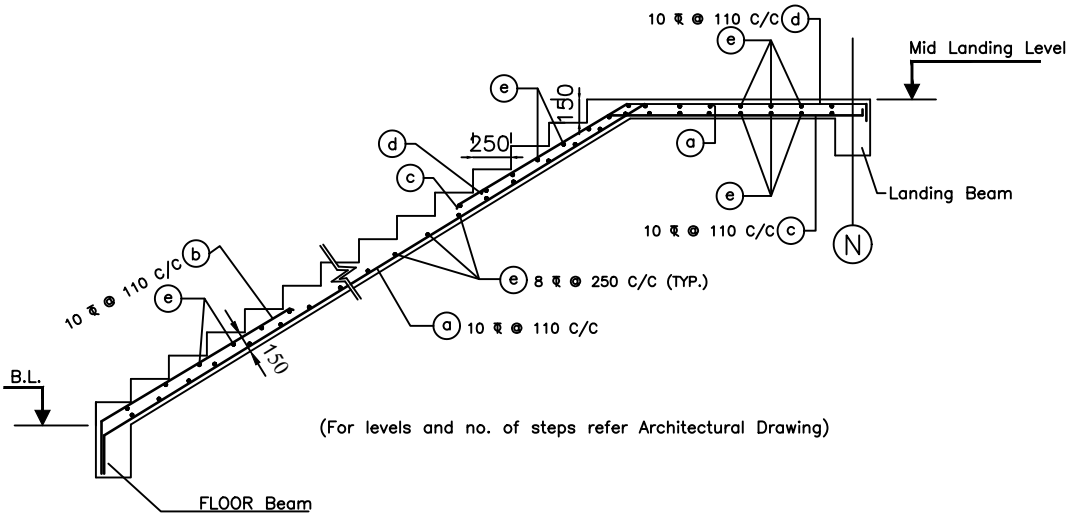

Structure Detail

TYP. DETAIL OF STAIR