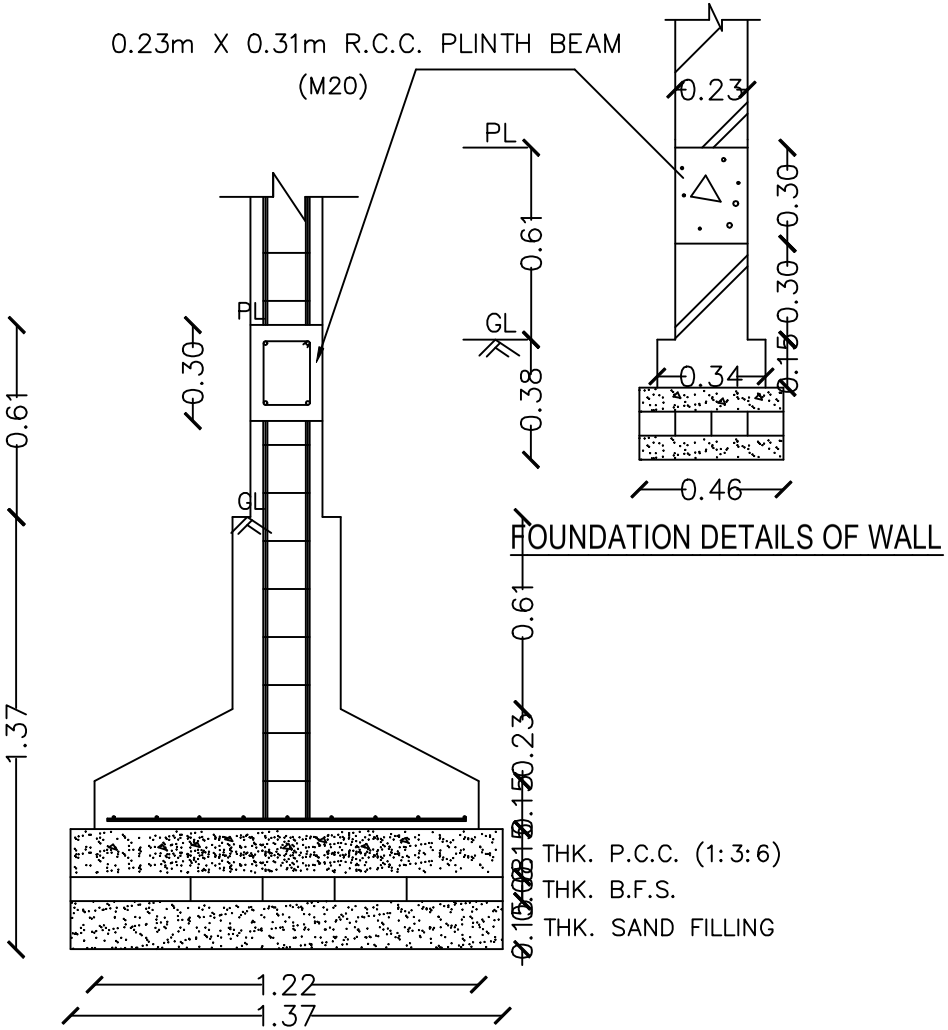

FOUNDATION DETAILS OF WALL

FOUNDATION DETAILS OF COLUMN

SCALE – 0.02m = 1.2m

SLAB SCHEDULE (CONC. GRADE M 20)				
THICKNESS OF SLAB = 4.5 "(EXCEPT MENTIONED OTHERWISE				
S.NO.	SLAB MARKED	THK.	AT SMALLER SPAN alternate cranked	AT LONGER SPAN at support
1.	S1	0.1m	60 mm. Tor0.10mc/c alternate cranked at support	60 mm. Tor0.10mc/c alternate cranked at support

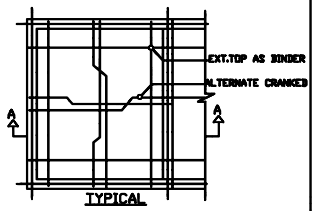

TYPICAL

REINFORCEMENT DETAILS OF SLAB

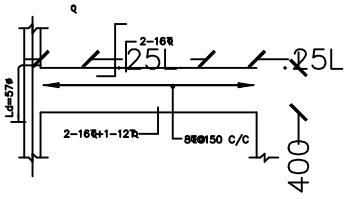

(TYP. DETAIL FOR LANDING BEAM)
(230x400)

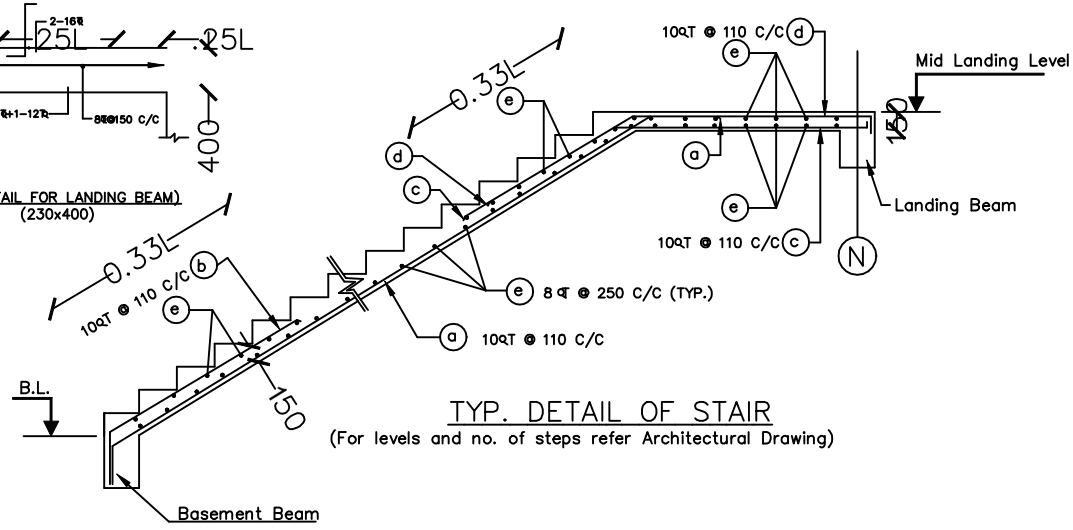

TYP. DETAIL OF STAIR

(For levels and no. of steps refer Architectural Drawing)

Structure Detail