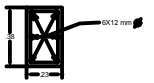

SECTION OF COLUMN

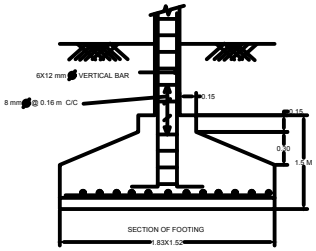

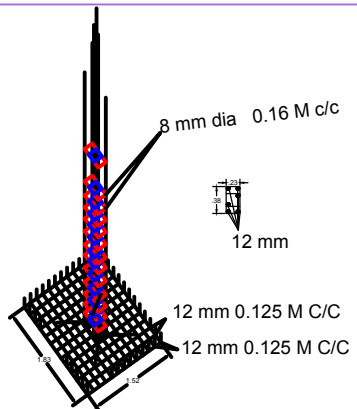

SKELTON OF COLUNM

10 mm dia 08 nos

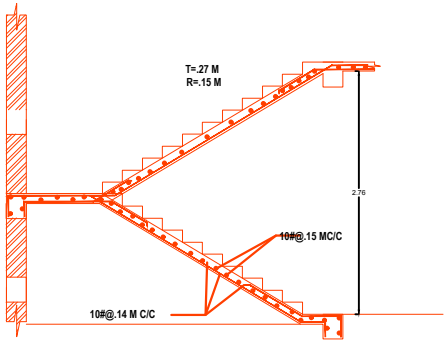

THICKNESS OF WAIST SLAB =.125 M

DETAILS OF STAIR

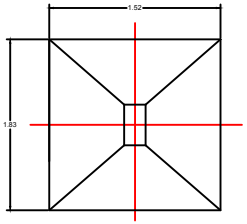

TYPICAL LAYOUT PLAN

FOUNDATION

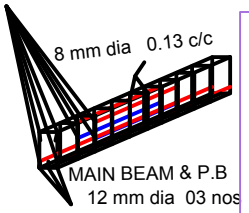

MAIN BEAM & P.B

12 mm dia 03 nos

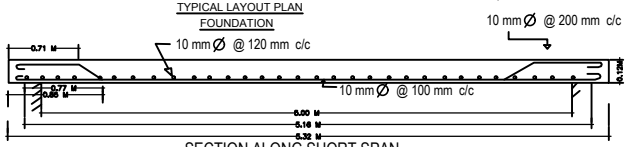

SECTION ALONG SHORT SPAN

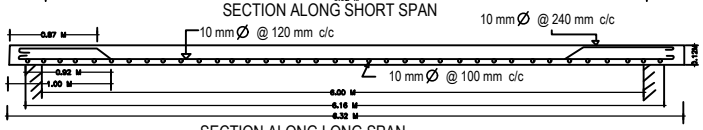

SECTION ALONG LONG SPAN

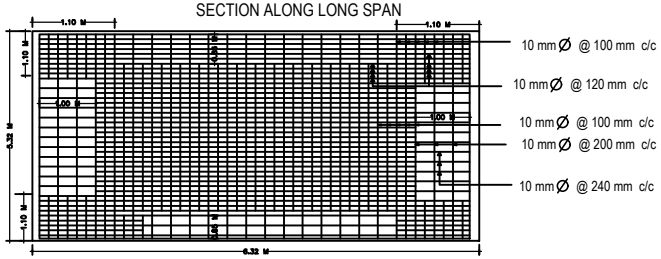

PLAN OF BOTTOM SLAB REINFOCEMENT