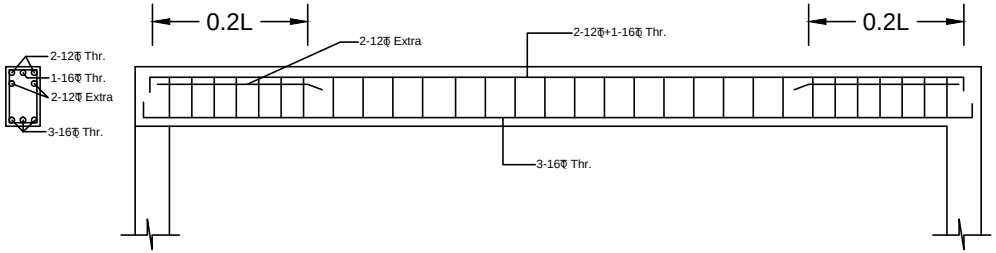

TYP. DETAIL FOR LANDING BEAM

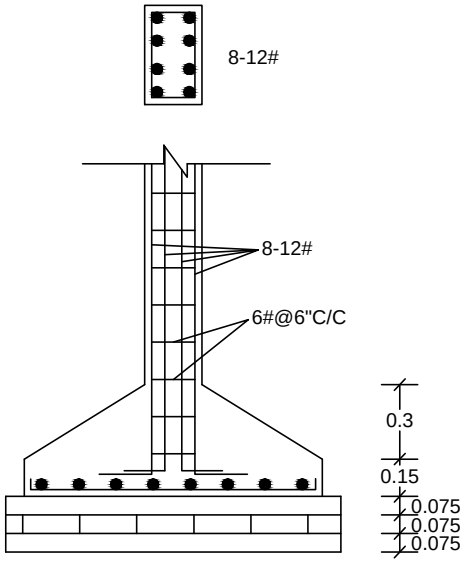

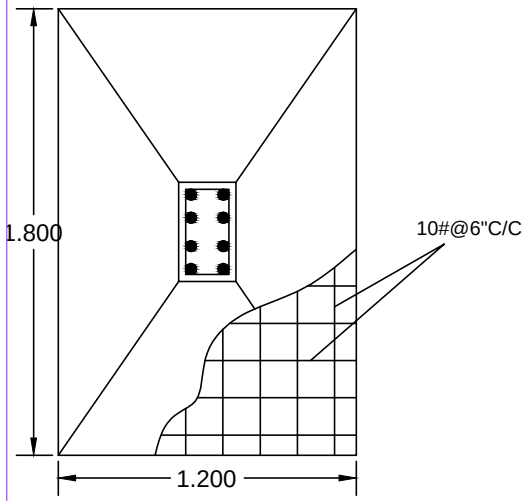

COLUMN DETAILS

SCALE:- 1:50

SLAB SCHEDULE (CONC. GRADE M 20)				
THICKNESS OF SLAB = 4.5" (EXCEPT MENTIONED OTHERWISE				
S.NO.	SLAB MARKED	THK.	AT SMALLER SPAN at ternate cranked	AT LONGER SPAN at support
1.	S1	0.1M	0.8MM TOR 0.188MM C/C at ternate cranked at support	0.8MM TOR 0.188MM C/C at ternate cranked at support

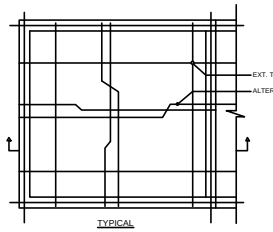

TYPICAL
REINFORCEMENT DETAIL OF SLAB

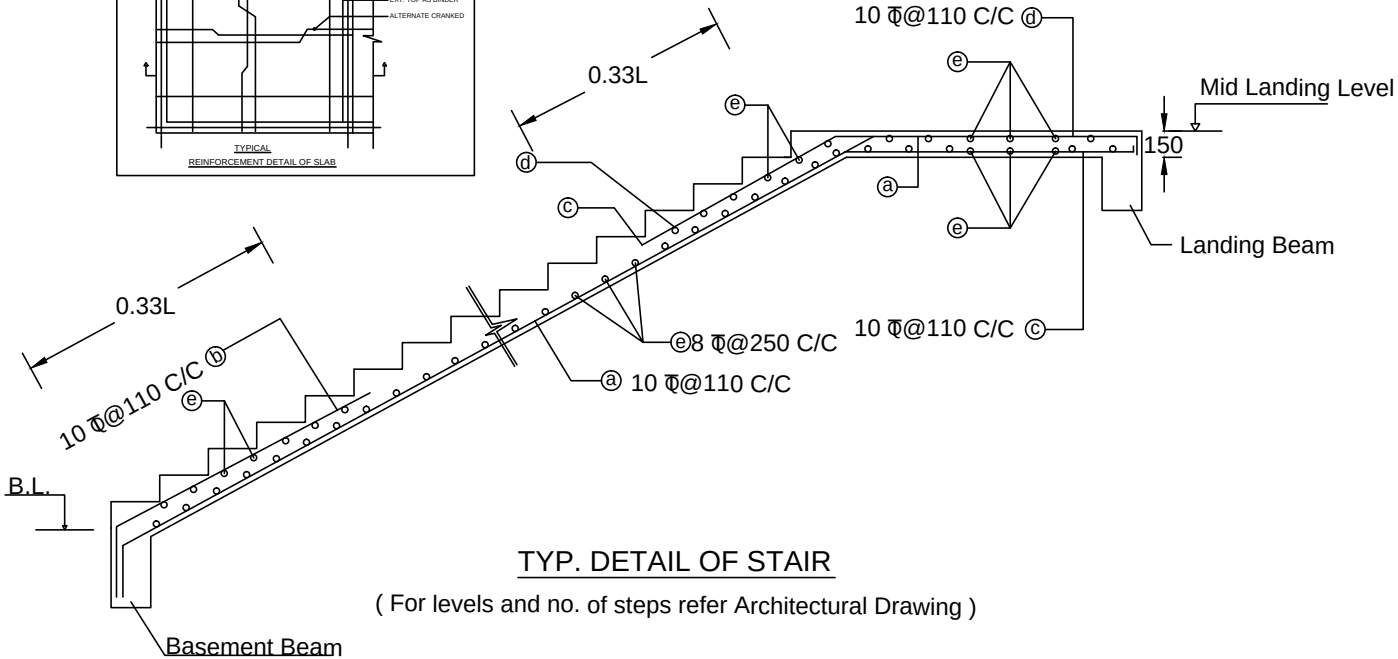

TYP. DETAIL OF STAIR

(For levels and no. of steps refer Architectural Drawing)