Project Title :Savitri Devi

AREA STATEMENT: DHANBAD MUNICIPAL CORPORATION	VERSION NO.: 1.0.28
	VERSION DATE: 16/10/2020
PROJECT DETAIL :	
Inward_No : -	Plot Use : Residential
Region : JHARKHAND URBAN LOCAL BODIES	Plot SubUse : Bungalow/ Dwelling / Non Apartment
District : DHANBAD	Land Use Zone : Residential
Application Type : General Proposal	Abutting Road Width : -
Project Type : Building Permission	Plot No. : -
Nature of Development : New	Revenue Survey No/Survey No : -
Location : Old Area	Thana No : -
Sub Location : NA	Holding No : -
Village/Mauza Name : -	Khata No : -
Ward No : -	North : -
Road/Street : -	South : -
	East : -
	West : -

AREA DETAILS :		SQ.MT.
AREA OF PLOT (Minimum)	(A)	334.32
Net Plot Area (Gross Plot Area - Deduction from Gross Plot area)	(A-Deductions)	334.32
Deductions for Balance Plot Area (from Gross Plot Area)		
COP Area		19.69
Total		19.69
Balance Plot Area (Net Plot Area - Recreational/Amenity space)	(A-Deductions)	314.64
Plot Area for Coverage (Net Plot Area)	(A-Deductions)	334.32
Plot Area for FSI (Net Plot Area + Road/Widening Area)	(A-Deductions)	334.32
COVERAGE CHECK		
Proposed Coverage Area (33.08 %)		110.58
Total Coverage Area (33.08 %)		110.58
FAR CHECK		
Proposed Area of FAR		346.94
Total Area of FAR		346.94
BUILT UP AREA CHECK		
Total Proposed Builtup Area		358.20
ARCH. / ENGG / SUPERVISOR (Regd)		OWNER
DEVELOPMENT AUTHORITY		LOCAL BODY

COLOR INDEX

- PLOT BOUNDARY
- ABUTTING ROAD
- PROPOSED WORK (COVERAGE AREA)
- EXISTING (To be retained)
- EXISTING (To be demolished)

Color Index:

MARGIN DETAIL:

Building / Wing Name	Road Name	Front Margin	Rear Margin	Side1 Margin	Side2 Margin
1-1 (A)	4.22 M WIDE ROAD	3.63	6.87	0.93	1.49

FAR & Tenement Details (Table 4c-1)

Building	No. of Same Bldg	Total Built Up Area (Sq.mt.)	Deductions (Area in Sq.mt.) Balcony	Proposed FAR Area (Sq.mt.) Resi.	Total FAR Area (Sq.mt.)	Tnmt (No.)
1 (A)	1	358.20	11.26	346.94	346.94	01
Grand Total :	1	358.20	11.26	346.94	346.94	01

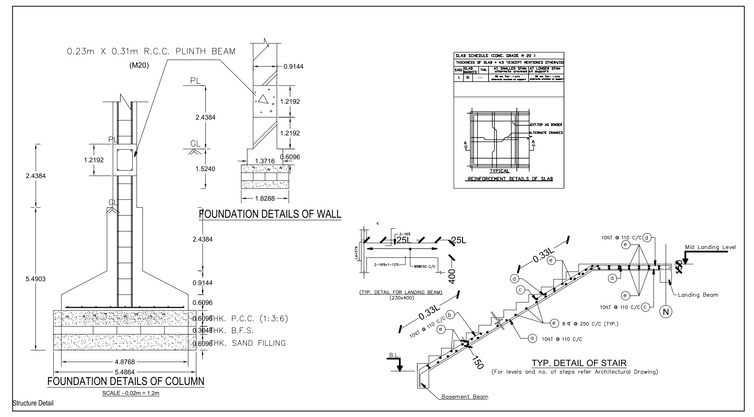

Structure Detail

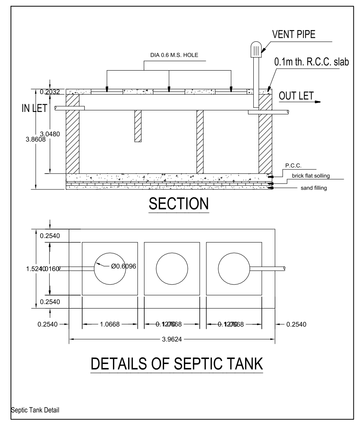

Septic Tank Detail

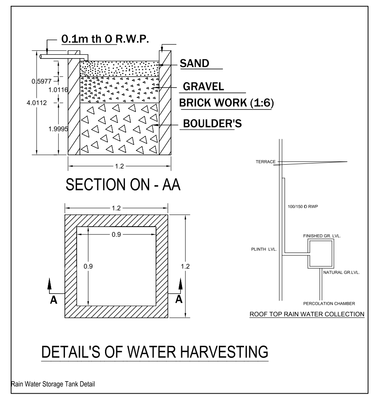

Rain Water Storage Tank Detail

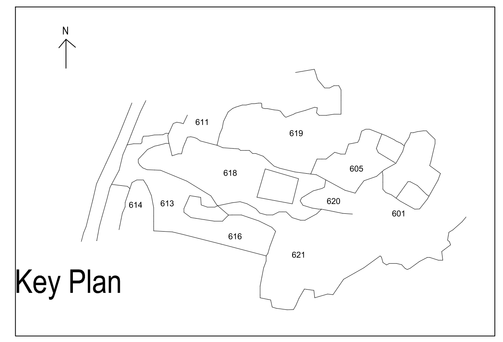

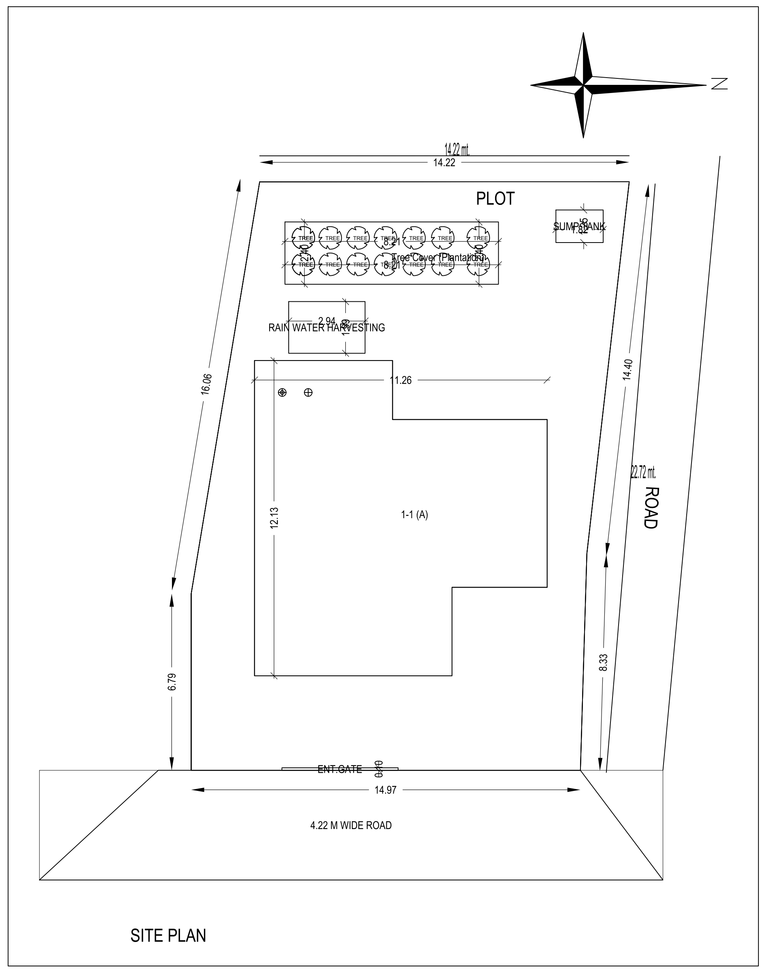

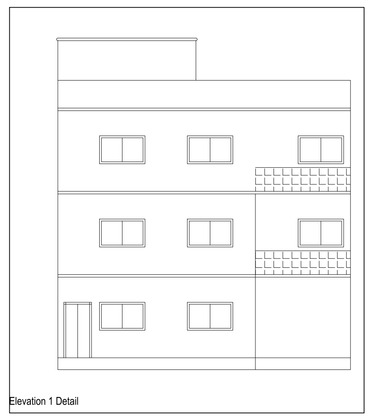
Elevation 1 Detail

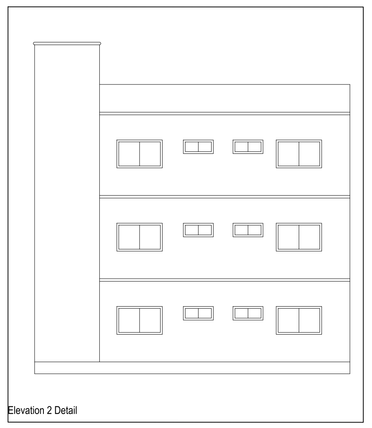
Elevation 2 Detail

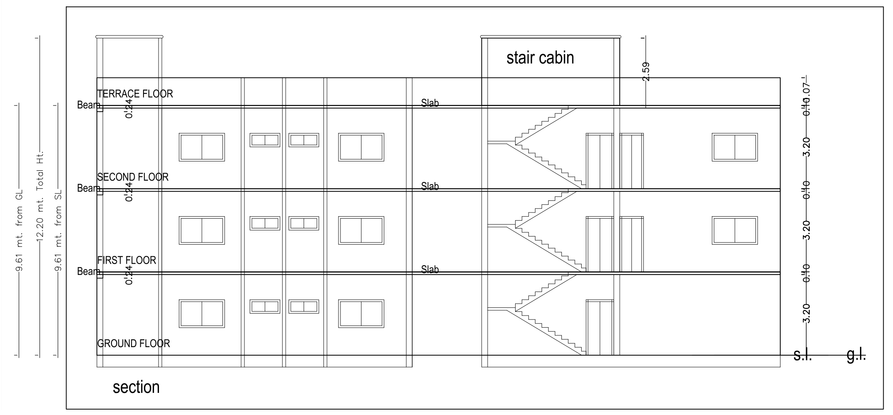

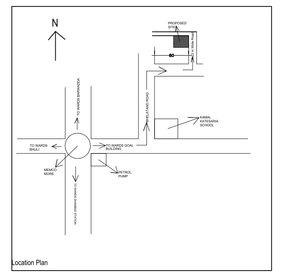
Location Plan

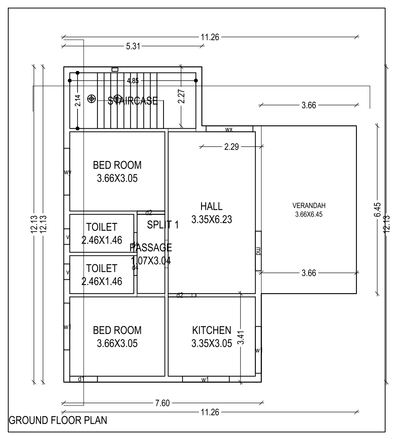

GROUND FLOOR PLAN

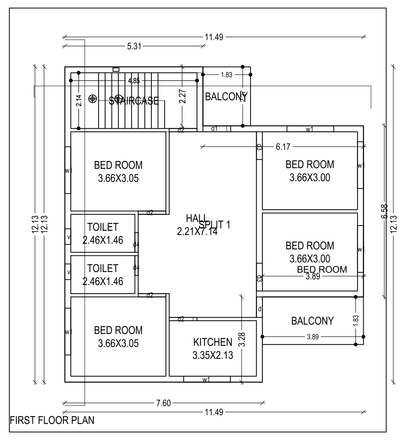

FIRST FLOOR PLAN

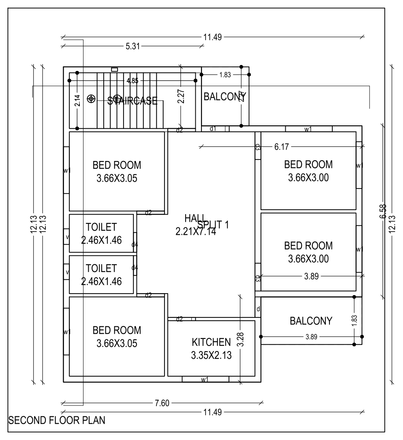

SECOND FLOOR PLAN

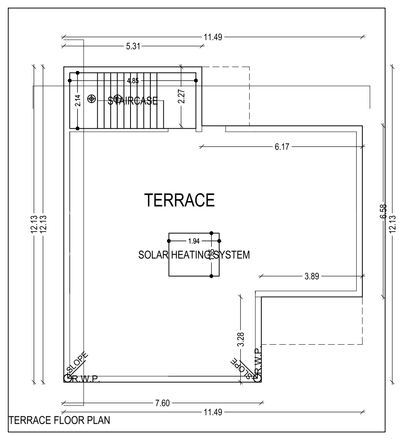

TERRACE FLOOR PLAN

BRIEF SPECIFICATION

FOUNDATION :- R.C.C. (1:1.5:3) Column footing foundation.

PLINTH :- 12"th R.C.C. (1:1.5:3) all round on plinth level.

FLOORING :- 1.5"th Marble. flooring over 3"th P.C.C. (1:3:6).

SUPER STRUCTURE :- First class brick work in cement mortar (1:6).

SLAB,BEAM, stairs & LINTEL :- All R.C.C. work (1:1.5:3).

WOOD WORK :- All door & window frames of sal wood

PLASTERING :- 12mm cement plaster (1:6) both side.

SCHEDULE

D1 - 1.07 X 2.13	W - 0.9 x 1.22
D2 - 0.9 X 2.13	W1 - 1.22 x 1.22
D3 - 0.76 x 2.13	W2 - 1.5 x 1.22
CG - 1.22 x 2.13	V - 0.61 x 0.61

DETAILS OF AREA

1),LAND AREA :- 334.32 SQM
2),GROUND FLOOR AREA :- 123.81 SQM
3),FIRST FLOOR AREA :- 123.81 SQM
4),COVERED AREA :- 358.20 SQM
5),% OF PLINTH AREA :- 37.03 %
6),F.A.R :- 1.03

TITLE OF DRAWING

PROPOSED RESIDENTIAL BUILDING PLAN OF SMT SABITRI DEVI W/O SRI KAMLA PRASAD SINGH UNDER PLOT NO. 618 (NEW 441, KHATA NO. 74 (NEW 125) UNDER MAUZA SHELATAND (B0) IN THE DISTRICT OF DHANBAD.

1 (A)

Building :1 (A)

Floor Name	Total Built Up Area (Sq.mt.)	Deductions (Area in Sq.mt.) Balcony	Proposed FAR Area (Sq.mt.) Resi.	Total FAR Area (Sq.mt.)	Tnmt (No.)
Ground Floor...	110.58	0.00	110.58	110.58	01
First Floor ...	123.81	5.63	118.18	118.18	00
Second Floor...	123.81	5.63	118.18	118.18	00
Terrace Floor...	0.00	0.00	0.00	0.00	00
Total :	358.20	11.26	346.94	346.94	01
Total Number of Same Buildings	1				
Total :	358.20	11.26	346.94	346.94	01

SCHEDULE OF JOINERY:

BUILDING NAME	NAME	LENGTH	HEIGHT	NOS
1 (A)	d4	0.76	2.10	06
1 (A)	d	0.79	2.10	02
1 (A)	d2	1.07	2.10	10
1 (A)	d1	1.07	2.10	03
1 (A)	d3	1.07	2.10	04
1 (A)	md	1.52	2.10	01
Total	-	-	-	26

SCHEDULE OF JOINERY:

BUILDING NAME	NAME	LENGTH	HEIGHT	NOS
1 (A)	V	0.60	1.00	06
1 (A)	WX	1.80	1.20	01
1 (A)	W1	1.80	1.20	15
1 (A)	WY	1.80	1.20	01
Total	-	-	-	23

Balcony Calculations Table

FLOOR	SIZE	AREA	TOTAL AREA
FIRST FLOOR PLAN	1.83 X 2.27 X 1 X 1	4.15	11.26
	1.83 X 3.89 X 1 X 1	7.11	
SECOND FLOOR PLAN	1.83 X 2.27 X 1 X 1	4.15	11.26
	1.83 X 3.89 X 1 X 1	7.11	
Total	-	-	22.52

UnitBUA Table for Building :1 (A)

FLOOR	Name	UnitBUA Type	UnitBUA Area	Carpet Area	No. of Rooms	No. of Tenement
GROUND FLOOR PLAN	SPLIT 1	FLAT	346.95	346.65	7	1
Total	-	-	346.95	346.65	23	1