Project Title :Sabitry Devi

| | |
|---|---|
| AREA STATEMENT: DHANBAD MUNICIPAL CORPORATION | VERSION NO.: 1.0.32 |
| | VERSION DATE: 16/10/2020 |
| PROJECT DETAIL : | |
| Inward_No. : - | |
| Region : JHARKHAND URBAN LOCAL BODIES | Plot SubUse : Bungalow/ Dwelling / Non Apartment |
| District : DHANBAD | Land Use Zone : Residential |
| Application Type : General Proposal | |
| Project Type : Building Permission | Plot No. : - |
| Nature of Development : Addition or Alteration | Revenue Survey No/Survey No : - |
| Location : Old Area | Thana No : - |
| Sub Location : NA | Holding No : - |
| Village/Mauza Name : - | Khata No : - |
| Ward No : - | |
| | |
| | |
| | West : - |

| AREA DETAILS : | | SQ.MT. |
|---|---|---|
| | | 334.53 |
| Net Plot Area (Gross Plot Area - Deduction from Gross Plot area) | (A-Deductions) | 334.53 |
| Deductions for Balance Plot Area (from Gross Plot Area) | | |
| | | 26.45 |
| Total | | 26.45 |
| | | 308.08 |
| | (A-Deductions) | |
| Plot Area for FSI (Net Plot Area + Road/Widening Area) | | 334.53 |
| COVERAGE CHECK | | |
| Proposed Coverage Area ( 30.09 % ) | | 100.65 |
| | | 100.65 |
| | | |
| Proposed Area of FAR | | 201.30 |
| Total Area of FAR | | 201.30 |
| | | |
| Total Proposed BuiltUp Area | | 201.30 |
| ARCH / ENGG / SUPERVISOR (Regd) | OWNER | |
| | | |
| DEVELOPMENT AUTHORITY | LOCAL BODY | |
| | | |

## COLOR INDEX

- PLOT BOUNDARY
- ABUTTING ROAD
- PROPOSED WORK (COVERAGE AREA)
- EXISTING (To be retained)
- EXISTING (To be demolished)

Color Index:

MARGIN DETAIL:

| Building / Wing Name | Road Name | Front Margin | Rear Margin | Side1 Margin | Side2 Margin |
|---|---|---|---|---|---|
| A-1 (1) | 6.09 m wide road | 2.74 | 2.36 | 7.01 | 1.52 |

FAR & Tenement Details (Table 4c-1)

| Building | No. of Same Bldg | Total Built Up Area (Sq.mt.) | Existing Built Up Area (Sq.mt.) | Proposed Built Up Area (Sq.mt.) | Existing FAR (Sq.mt.)(To be retained) | Proposed FAR Area (Sq.mt.) Resi. | Total FAR Area (Sq.mt.) | Tnmt (No.) |
|---|---|---|---|---|---|---|---|---|
| A (1) | 1 | 201.30 | | 107.65 | 100.65 | 100.65 | 201.30 | |
| Grand Total : | 1 | | 100.65 | 107.65 | | 100.65 | 201.30 | 01 |

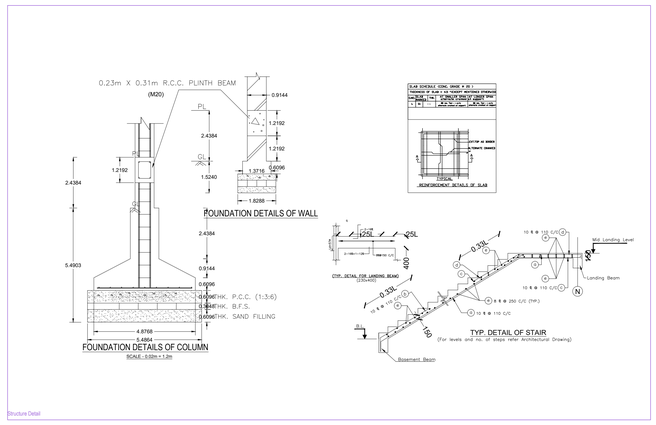


Structure Detail

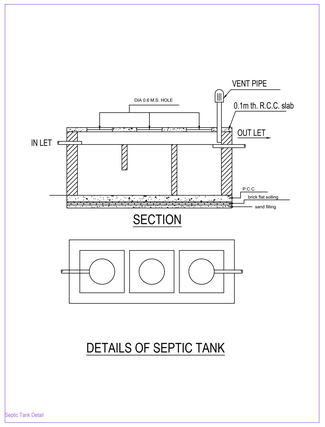


Septic Tank Detail

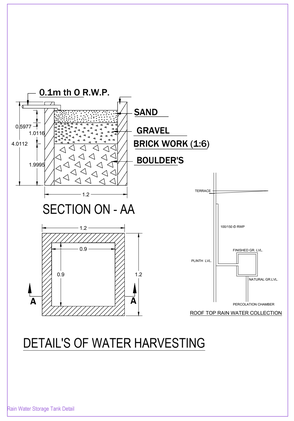


Rain Water Storage Tank Detail

Elevation 1 Detail

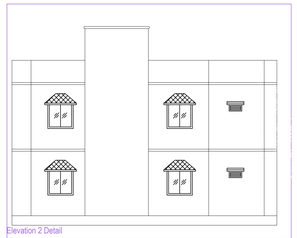

Elevation 2 Detail

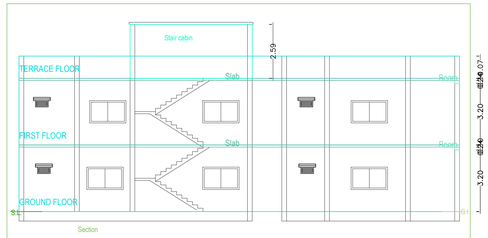


Section

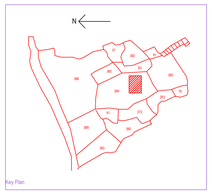

Key Plan

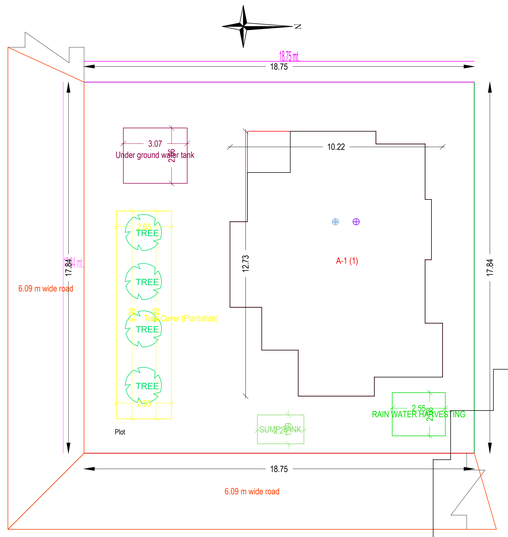


Site plan

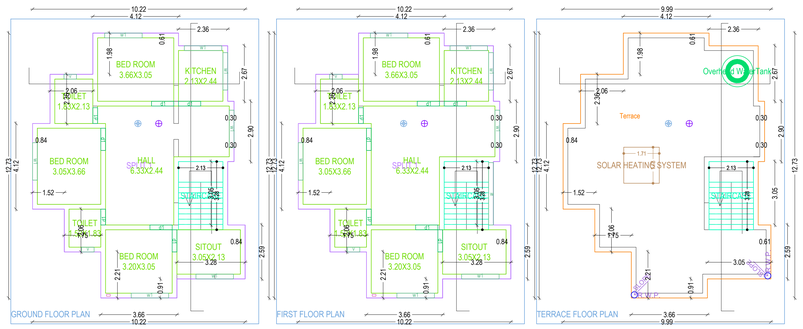


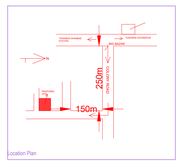


Location Plan

## BRIEF SPECIFICATION

**FOUNDATION** :- R.C.C. (1:1.5:3) Column footing foundation.

**PLINTH** :- 12"th R.C.C. (1:1.5:3) all round on plinth level.

**FLOORING** :- 1.5"th Marble. flooring over 3"th P.C.C. (1:3:6).

**SUPER STRUCTURE** :- First class brick work in cement mortar (1:6).

**SLAB,BEAM, stairs & LINTEL** :- All R.C.C. work (1:1.5:3).

**WOOD WORK** :- All door & window frames of sal wood

**PLASTERING** :- 12mm cement plaster (1:6) both side.

## DETAILS OF AREA

| | | |
|---|---|---|
| 1).LAND AREA | :- | 334.53 SQM |
| 2).GROUND FLOOR ( existing) | :- | 100.65 SQM |
| 2).FIRST FLOOR AREA | :- | 100.65 SQM |
| 4).COVERED AREA | :- | 201.30 SQM |
| 5).% OF PLINTH AREA | :- | 30.09% |
| 6).F.A.R | :- | 0.6 |

## TITLE OF DRAWING

Existing cum Proposed Residential Building Plan of Smt. Sabitry Devi w/o Sri Chandeswari Maharaj Under Plot no. 384; Khata no.76,UNDER Mauza Kolakushma (12) in the district of dhanbad.

A (1)

Building :A (1)

| Floor Name | Total Built Up Area (Sq.mt.) | Existing Built Up Area (Sq.mt.) | Proposed Built Up Area (Sq.mt.) | Existing FAR Area (Sq.mt.) | Proposed FAR Area (Sq.mt.) Resi. | Total FAR Area (Sq.mt.) | Tnmt (No.) |
|---|---|---|---|---|---|---|---|
| Ground Floor | 100.65 | 100.65 | 0.00 | 100.65 | 0.00 | 100.65 | 01 |
| First Floor... | 100.65 | 0.00 | 100.65 | 0.00 | 100.65 | 100.65 | 00 |
| Terrace Floor... | 0.00 | 0.00 | 7.00 | 0.00 | 0.00 | 0.00 | 00 |
| Total : | 201.30 | 100.65 | 107.65 | 100.65 | 100.65 | 201.30 | 01 |
| Total Number of Same Buildings : | 1 | | | | | | |
| Total : | 201.30 | 100.65 | 107.65 | 100.65 | 100.65 | 201.30 | 01 |

SCHEDULE OF JOINERY:

| BUILDING NAME | NAME | LENGTH | HEIGHT | NOS |
|---|---|---|---|---|
| A (1) | d1 | 0.76 | 2.10 | 04 |
| A (1) | d1 | 1.07 | 2.10 | 10 |
| Total | - | - | - | 14 |

SCHEDULE OF JOINERY:

| BUILDING NAME | NAME | LENGTH | HEIGHT | NOS |
|---|---|---|---|---|
| A (1) | V | 0.60 | 1.00 | 04 |
| A (1) | W1 | 1.80 | 1.20 | 14 |
| A (1) | W | 3.00 | 1.20 | 01 |
| Total | - | - | - | 19 |

UnitBUA Table for Building :A (1)

| FLOOR | Name | UnitBUA Type | Entity Type | UnitBUA Area | Carpet Area | No. of Rooms | No. of Tenement |
|---|---|---|---|---|---|---|---|
| GROUND FLOOR PLAN | SPLIT 1 | FLAT | Existing | 201.30 | 201.26 | 8 | 1 |
| Total | - | - | - | 201.30 | 201.26 | 16 | 1 |