Project Title :EJAZ ALAM

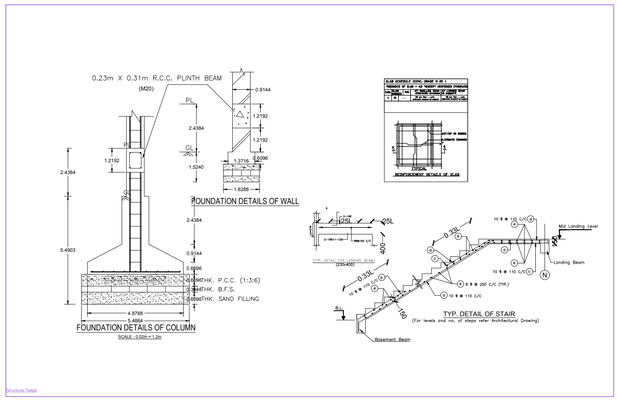

Structure Detail

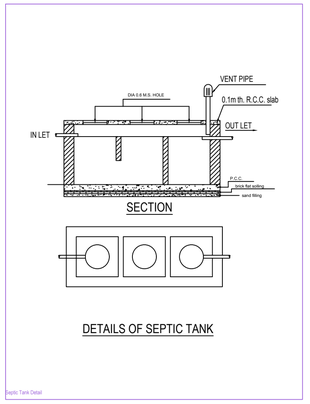

Septic Tank Detail

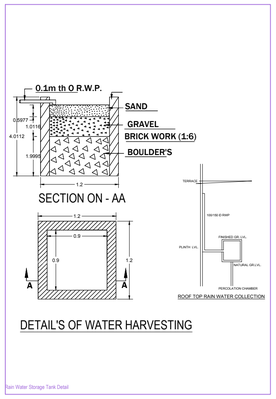

Rain Water Storage Tank Detail

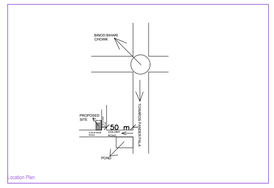

Location Plan

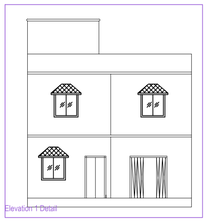
Elevation 1 Detail

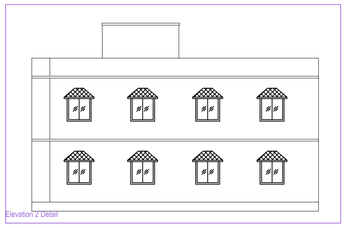
Elevation 2 Detail

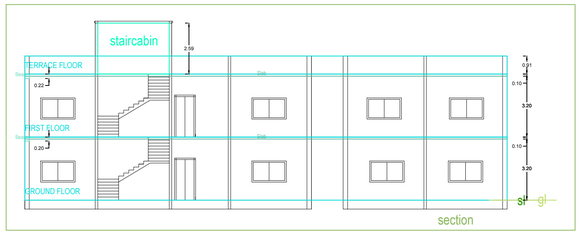

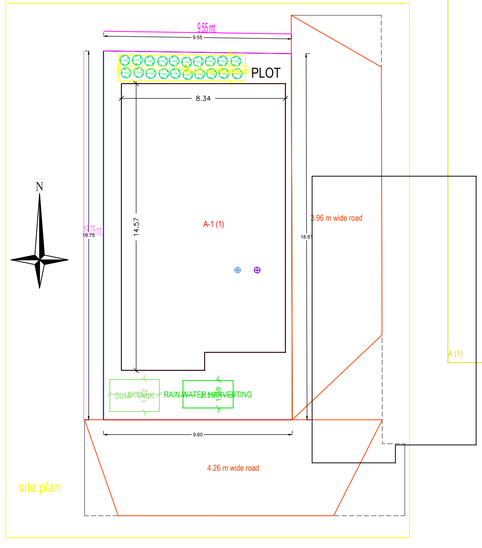

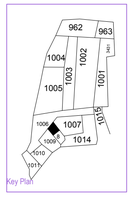
Key Plan

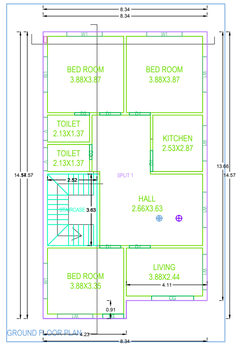

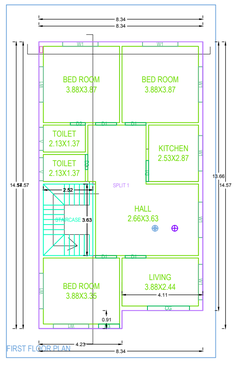

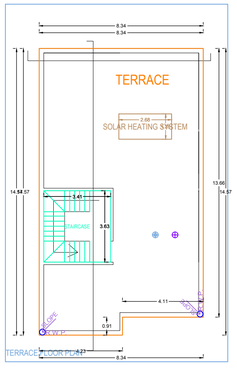

BRIEF SPECIFICATION

FOUNDATION ----------CEMENT CONCRETE (1:3:6)
BRICK WORK---------- IN FOUNDATION & SUPERSTRUCTURE
----- FIRST CLASS BRICK WORK IN CEMENT MORTAR (1:6)
D.P.C----------1"D.P.C IN CEMENT CONCRETE (1:2:4)
FLOOR----------1" I.P.S OVER 3" P.C.C
ROOF----------4" THK. R.C.C ROOF (1:1.5:3)
LITEL----------6" THK. R.C.C LINTEL (1:1.5:3)
STAIR----------RISE = 6" , TREAD = 10"
SLAB , BEAM , COLUMN----------ALL R.C.C WORK (1:1.5:3)
WOOD WORK-------ALL DOOR & WINDOW FRAMES OF SAL WOOD.
PLATERING WORK-------12mm CEMENT PLASTER (1:6) BOTH SIDE.

SCHEDULE

D1 - 3'-6" X 7'-0"	W - 3'-0" X 4'-0"
D2 - 3'-0 X 7'-0"	W1 - 4'-0" X 4'-0"
D3 - 2'-6" X 7'-0"	W2 - 5'-0" X 4'-0"
CG - 4'-0" X 7'-0"	V - 3'-0" X 2'-0"

DETAILS OF AREA

1).TOTAL AREA OF THE LAND---------- 178.95 SQM
2).GROUND FLOOR AREA ---------- 117.75 SQM
3).FRIST FLOOR AREA ---------- 117.75 SQM
4).COVERED AREA ---------- 235.50 SQM

TITLE OF DRAWING

PROPOSED RESIDENTIAL BUILDING PLAN OF EJAZ ALAM S/O LATE MAHTAB ALAM ,UNDER MOUZA -PANDERPALA, MOUZA NO.-04 , PLOT NO. : 1281 (NEW: 1008) (, KHATA NO. 57 (NEW : 212) P.S - DHANBAD, IN THE DISTT. OF DHANBAD .(JH).

AREA STATEMENT: DHANBAD MUNICIPAL CORPORATION		VERSION NO.: 1.0.36
		VERSION DATE: 16/10/2020
PROJECT DETAIL :		
Inward_No : -		Plot Use : Residential
Region : JHARKHAND URBAN LOCAL BODIES		Plot SubUse : Bungalow/ Dwelling / Non Apartment
District : DHANBAD		Land Use Zone : Residential
Application Type : General Proposal		Abutting Road Width : -
Project Type : Building Permission		Plot No. : -
Nature of Development : New		Revenue Survey No/Survey No: -
Location : Old Area		Thana No : -
Sub Location : NA		Holding No : -
Village/Mauza Name : -		Khata No : -
Ward No : -		North : -
Road/Street : -		South : -
		East : -
		West : -
AREA DETAILS :		SQ.MT.
AREA OF PLOT (Minimum)	(A)	178.95
Net Plot Area (Gross Plot Area - Deduction from Gross Plot area)	(A-Deductions)	178.95
Deductions for Balance Plot Area (from Gross Plot Area)		
COP Area		8.45
Total		8.45
Balance Plot Area (Net Plot Area - Recreational/Amenity space)	(A-Deductions)	170.50
Plot Area for Coverage (Net Plot Area)	(A-Deductions)	178.95
Plot Area for FSI (Net Plot Area + Road/Widening Area)	(A-Deductions)	178.95
COVERAGE CHECK		
Proposed Coverage Area (65.80 %)		117.75
Total Coverage Area (65.80 %)		117.75
FAR CHECK		
Proposed Area of FAR		235.50
Total Area of FAR		235.50
BUILT UP AREA CHECK		
Total Proposed BuiltUp Area		235.50
ARCH / ENGG / SUPERVISOR (Regd)		OWNER
DEVELOPMENT AUTHORITY		LOCAL BODY

COLOR INDEX

- PLOT BOUNDARY
- ABUTTING ROAD
- PROPOSED WORK (COVERAGE AREA)
- EXISTING (To be retained)
- EXISTING (To be demolished)

Color Index:

MARGIN DETAIL:

Building / Wing Name	Road Name	Front Margin	Rear Margin	Side1 Margin	Side2 Margin
A-1 (1)	4.26 m wide road	2.52	1.53	0.91	0.30

FAR & Tenement Details (Table 4c-1)

Building	No. of Same Bldg	Total Built Up Area (Sq.mt.)	Proposed FAR Area (Sq.mt.) Resi.	Total FAR Area (Sq.mt.)	Tnmt (No.)
A (1)	1	235.50	235.50	235.50	01
Grand Total	1	235.50	235.50	235.50	01

Building :A (1)

Floor Name	Total Built Up Area (Sq.mt.)	Proposed FAR Area (Sq.mt.) Resi.	Total FAR Area (Sq.mt.)	Tnmt (No.)
Ground Floor...	117.75	117.75	117.75	01
First Floor ...	117.75	117.75	117.75	00
Terrace Floor...	0.00	0.00	0.00	00
Total :	235.50	235.50	235.50	01
Total Number of Same Buildings	1			
Total :	235.50	235.50	235.50	01

SCHEDULE OF JOINERY:

BUILDING NAME	NAME	LENGTH	HEIGHT	NOS
A (1)	D2	0.76	2.10	04
A (1)	D3	1.07	2.10	02
A (1)	D1	1.07	2.10	10
A (1)	CG	2.13	2.10	02
Total :	-	-	-	18

SCHEDULE OF JOINERY:

BUILDING NAME	NAME	LENGTH	HEIGHT	NOS
A (1)	V	1.18	1.00	04
A (1)	W1	1.80	1.20	18
Total :	-	-	-	22

UnitBUA Table for Building :A (1)

FLOOR	Name	UnitBUA Type	UnitBUA Area	Carpet Area	No. of Rooms	No. of Tenement
GROUND FLOOR PLAN	SPLIT 1	FLAT	235.51	235.41	8	1
Total :	-	-	235.51	235.41	16	1