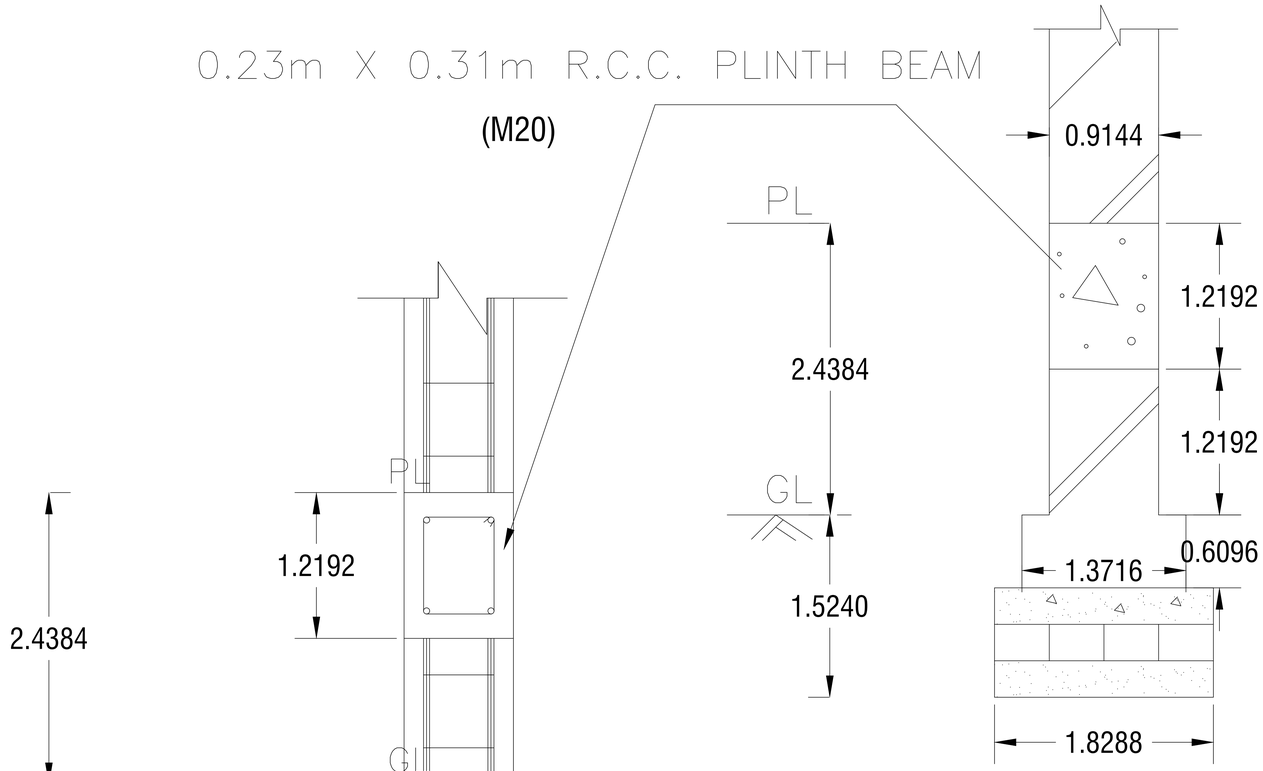

FOUNDATION DETAILS OF WALL

FOUNDATION DETAILS OF COLUMN

SCALE - 0.02m = 1.2m

Structure Detail