Project Title :ANAND KUMARMAHTHA

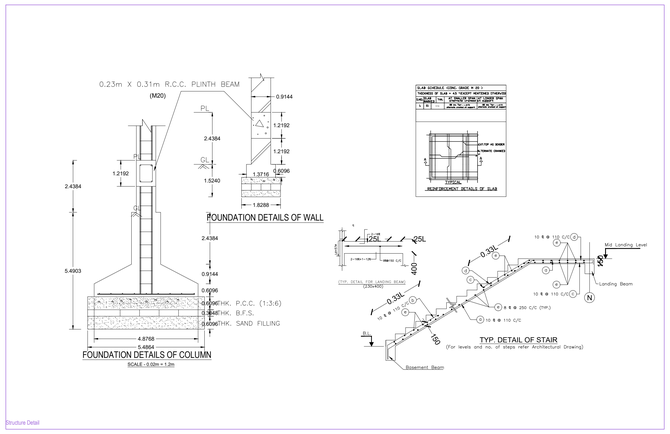

Structure Detail

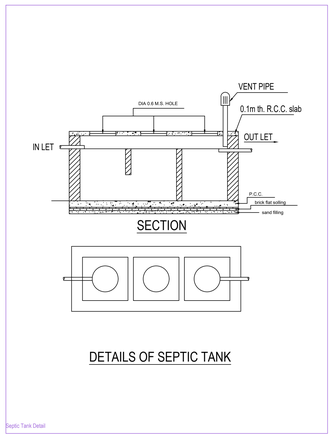

Septic Tank Detail

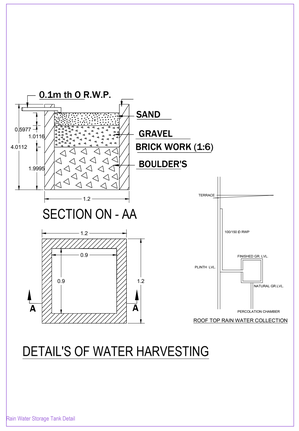

Rain Water Storage Tank Detail

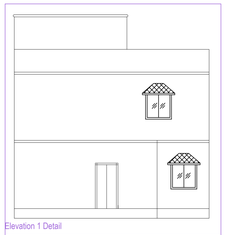

Elevation 1 Detail

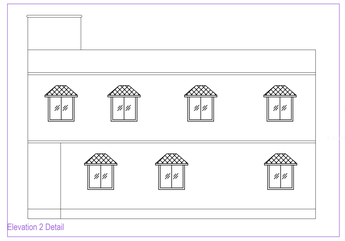

Elevation 2 Detail

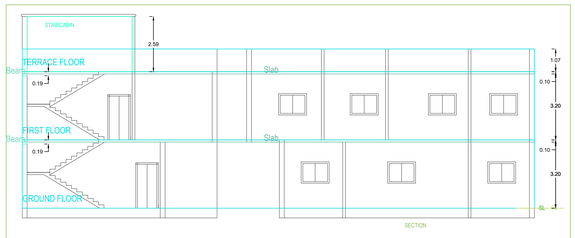

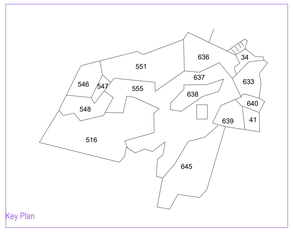

Key Plan

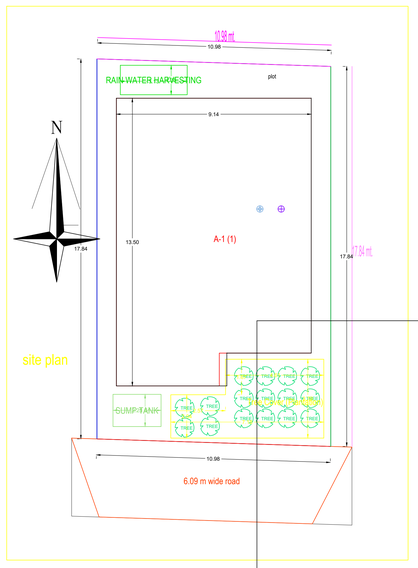

A (1)

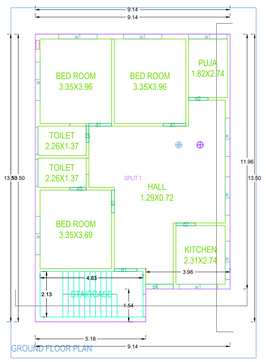

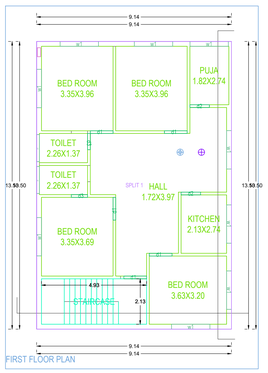

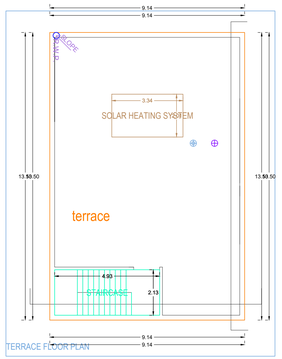

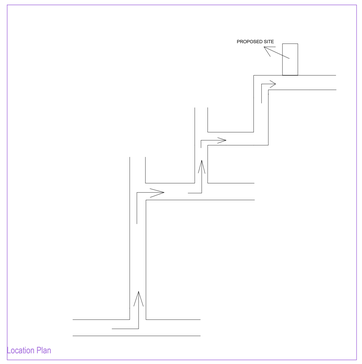

AREA STATEMENT: DHANBAD MUNICIPAL CORPORATION	VERSION NO.: 1.0.36	
	VERSION DATE: 16/10/2020	
PROJECT DETAIL :		
Inward_No. : -	Plot Use : Residential	
Region : JHARKHAND URBAN LOCAL BODIES	Plot SubUse : Bungalow/ Dwelling / Non Apartment	
District : DHANBAD	Land Use Zone : Residential	
Application Type : General Proposal	Abutting Road Width : -	
Project Type : Building Permission	Plot No. : -	
Nature of Development : New	Revenue Survey No/Survey No : -	
Location : Old Area	Thana No : -	
Sub Location : NA	Holding No : -	
Village/Mauza Name : -	Khata No : -	
Ward No : -	North : -	
Road/Street : -	South : -	
	East : -	
	West : -	

AREA DETAILS :		SQ.MT.
AREA OF PLOT (Minimum)	(A)	195.72
Net Plot Area (Gross Plot Area - Deduction from Gross Plot area)	(A-Deductions)	195.72
Deductions for Balance Plot Area (from Gross Plot Area)		
CGP Area		22.29
Total		22.29
Balance Plot Area (Net Plot Area - Recreational/Amenity space)	(A-Deductions)	173.44
Plot Area for Coverage (Net Plot Area)	(A-Deductions)	195.72
Plot Area for FSI (Net Plot Area + Road/Widening Area)	(A-Deductions)	195.72
COVERAGE CHECK		
Proposed Coverage Area (59.96 %)		117.35
Total Coverage Area (59.96 %)		117.35
FAR CHECK		
Proposed Area of FAR		240.79
Total Area of FAR		240.79
BUILT UP AREA CHECK		
Total Proposed Built Up Area		240.79

ARCH / ENGG / SUPERVISOR (Regd)	OWNER
DEVELOPMENT AUTHORITY	LOCAL BODY

COLOR INDEX

- PLOT BOUNDARY
- ABUTTING ROAD
- PROPOSED WORK (COVERAGE AREA)
- EXISTING (To be retained)
- EXISTING (To be demolished)

Color Index:

MARGIN DETAIL:

Building / Wing Name	Road Name	Front Margin	Rear Margin	Side1 Margin	Side2 Margin
A-1 (1)	6.09 m wide road	2.52	1.52	0.91	0.91

FAR & Tenement Details (Table 4c-1)

Building	No. of Same Bldg	Total Built Up Area (Sq.mt.)	Proposed FAR Area (Sq.mt.) Resi.	Total FAR Area (Sq.mt.)	Tnmt (No.)
A (1)	1	240.79	240.79	240.79	01
Grand Total :	1	240.79	240.79	240.79	01

Building :A (1)

	Total Built Up Area (Sq.mt.)	Proposed FAR Area (Sq.mt.) Resi.	Total FAR Area (Sq.mt.)	Tnmt (No.)
Ground Floor...	117.35	117.35	117.35	01
First Floor...	123.44	123.44	123.44	00
Terrace Floor...	0.00	0.00	0.00	00
Total :	240.79	240.79	240.79	01
Total Number of Same Buildings :	1			
Total :	240.79	240.79	240.79	01

SCHEDULE OF JOINERY:

BUILDING NAME	NAME	LENGTH(	HEIGHT(	NOS
A (1)	d3	0.76	2.10	04
A (1)	d2	0.91	2.10	04
A (1)	d1	1.07	2.10	09
A (1)	d4	1.29	2.10	01
Total :		-	-	18

SCHEDULE OF JOINERY:

BUILDING NAME	NAME	LENGTH(	HEIGHT(	NOS
A (1)	V1	1.27	1.00	04
A (1)	W1	1.80	1.20	18
Total :		-	-	22

UnitBUA Table for Building :A (1)

FLOOR	Name	UnitBUA Type	UnitBUA Area	Carpet Area	No. of Rooms	No. of Tenement
GROUND FLOOR PLAN	SPLIT 1	FLAT	240.80	240.67	8	1
Total :	-	-	240.80	240.67	17	1