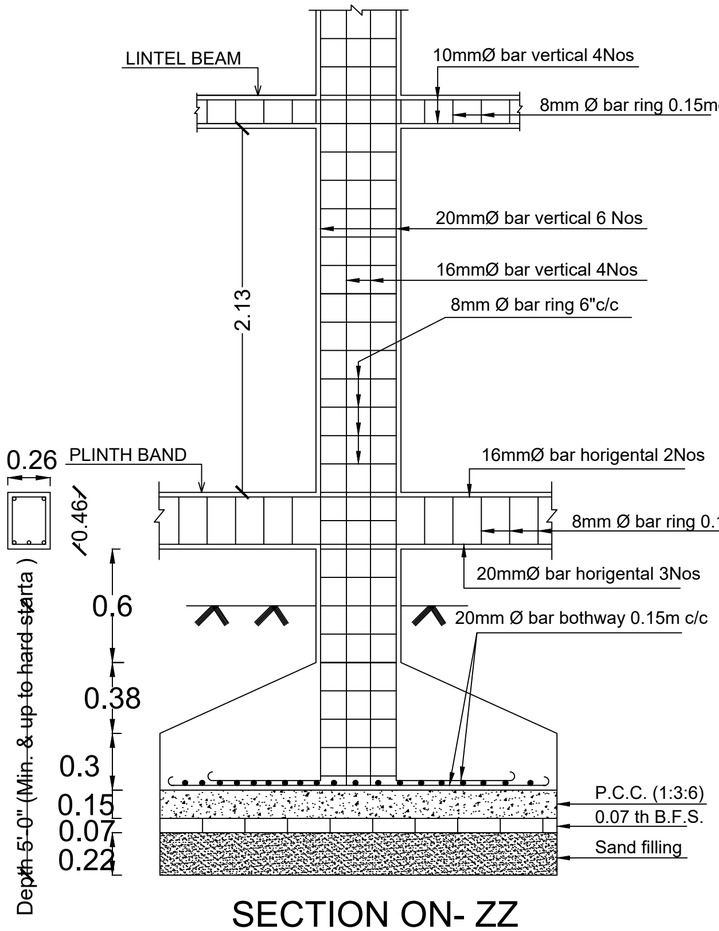

SECTION ON- ZZ

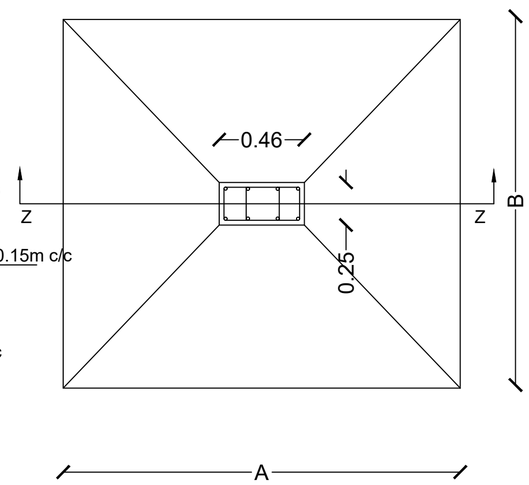

PLAN

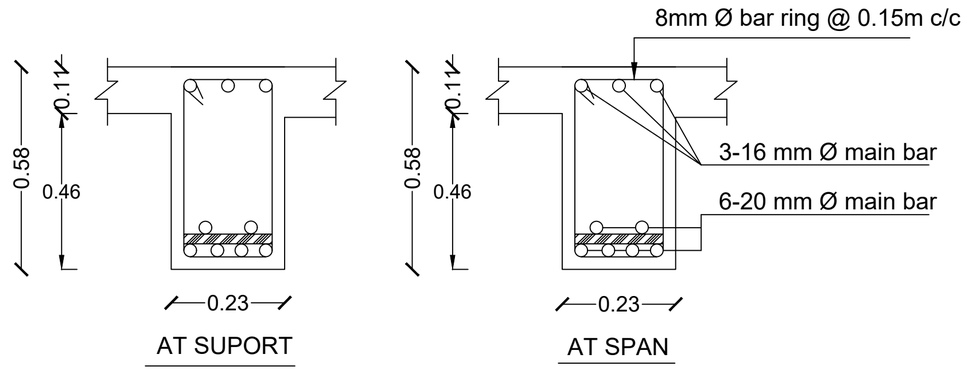

AT SUPORT

AT SPAN

DETAILS OF TYPICAL ROOF BEAM

DETAILS OF TYPICAL COLUMN FOOTING

Structure Detail