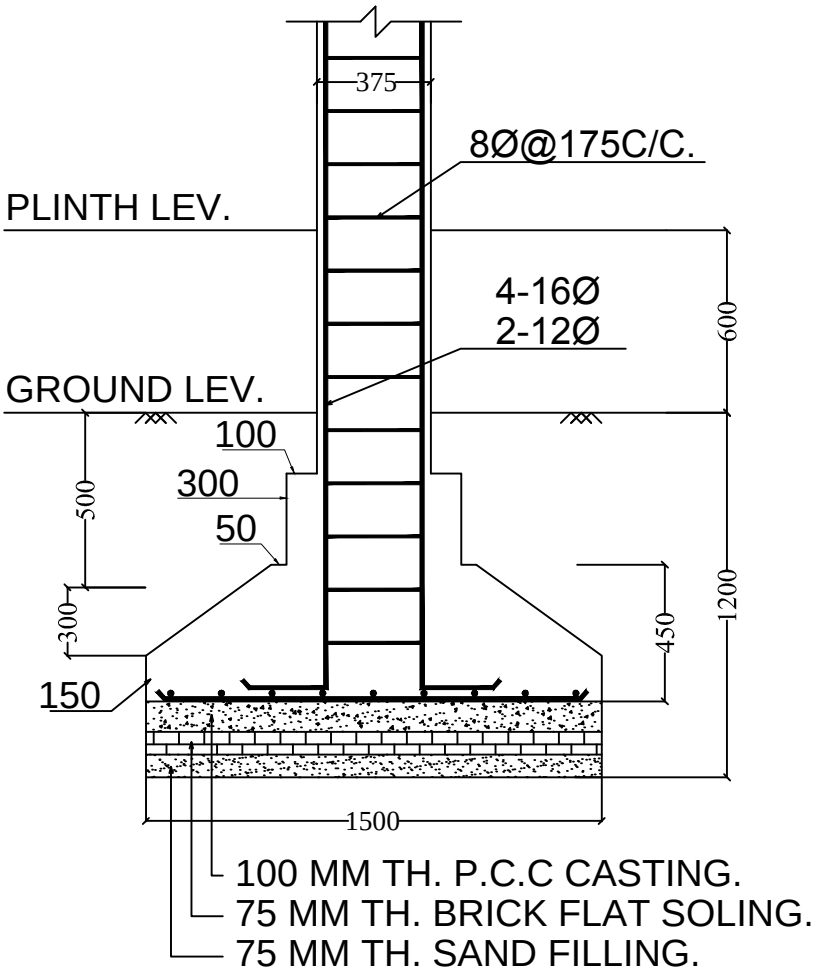

SECTION:-(B-B)

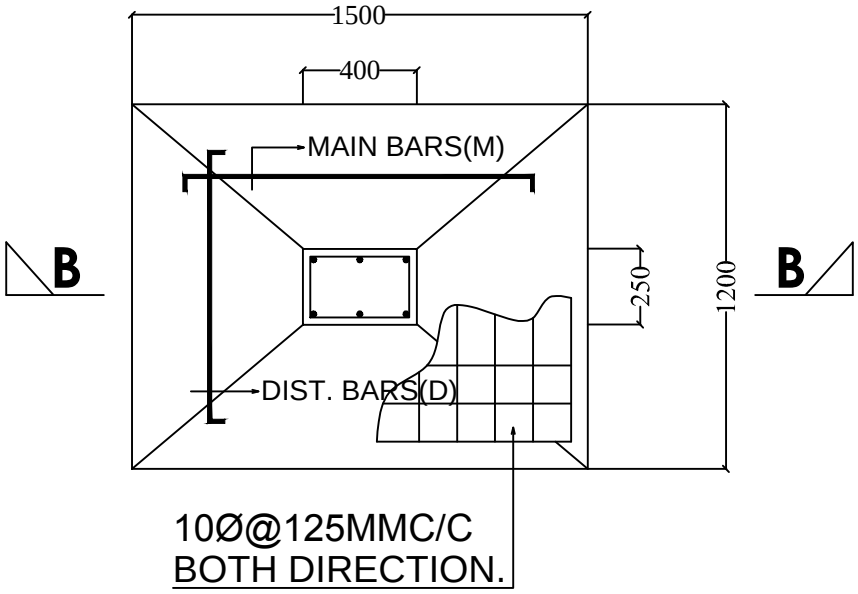

FOUNDATION PLAN OF CLOUMN