Project Title :industrial building

DATE	06-02-2020
SHEET NO.	1
	-

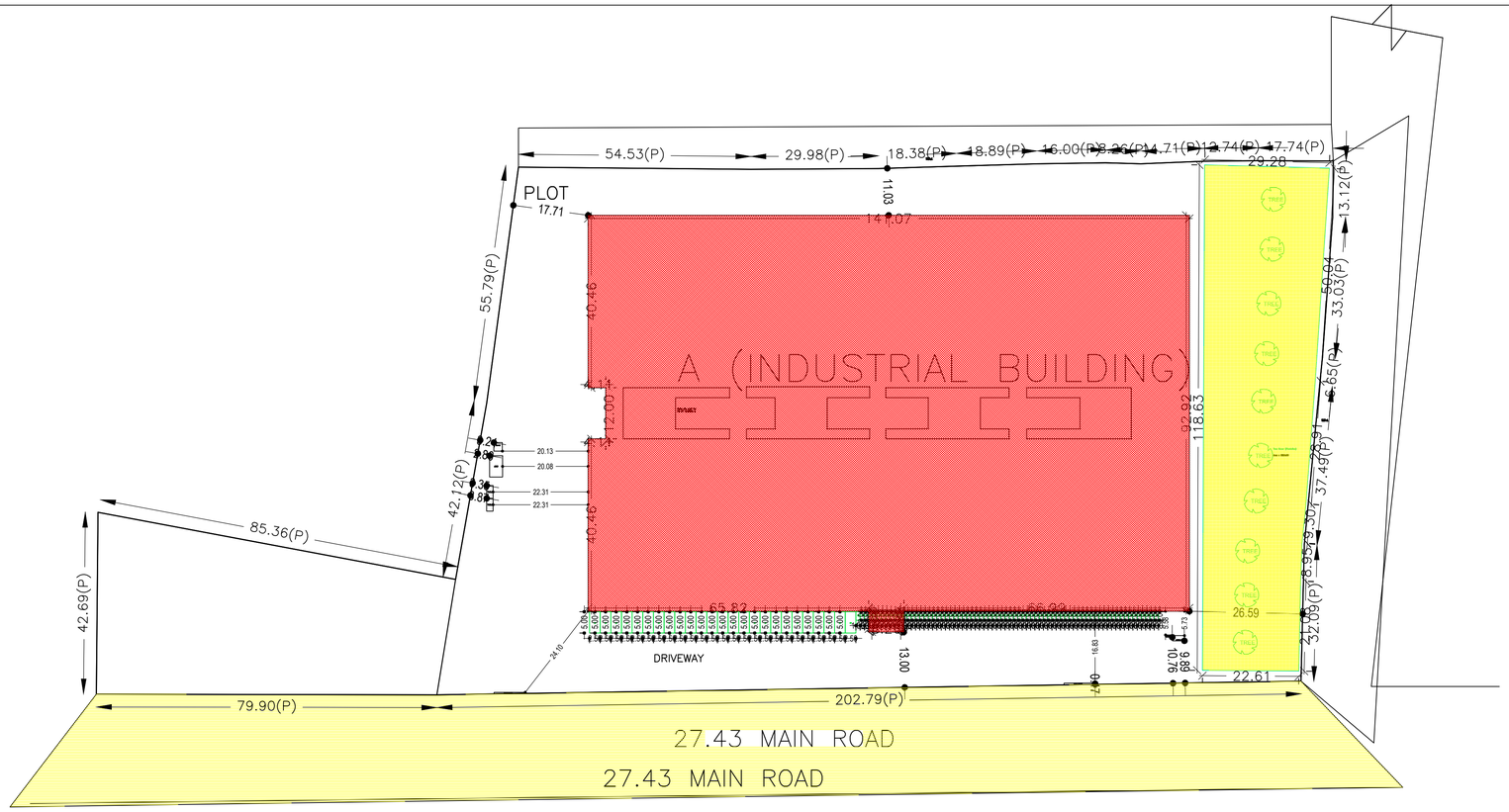

Required Parking(Table 7a)

Building Name	Type	SubUse	Area (Sq.mt.)	Units		Car			TwoWheeler		
				Reqd.	Prop.	Reqd./Unit	Reqd.	Prop.	Reqd./Unit	Reqd.	Prop.
A (INDUSTRIAL BUILDING)	Industrial	Industrial Building	> 0	400	13328.13	1	23	-	-	-	-
			> 0	400	13328.13	-	-	-	1	70	-
	Total :		-	-	-	-	23	25	-	70	71

Parking Check (Table 7b)

Vehicle Type	Reqd.		Prop.	
	No.	Area	No.	Area
Car	-	-	25	312.50
Total Car	23	287.50	25	312.50
TwoWheeler	-	-	71	142.00
Total TwoWheeler	70	140.00	71	142.00
Total	427.50		596.50	

Proposal Basic Information

Proposal File No.	JIADA/BP/0026/2019
Owner Name	BEST LAN GARMENTS PVT.LTD. REPRESENTED BY RAJKUMAR RAMASAMY
Khata No	24,22,22,52,52,46,01,28
Plot No	24,22,22,52,52,46,01,28
Village Name	Uchring
Use	Industrial
SubUse	Industrial Building

SCHEDULE OF DOOR:

BUILDING NAME	NAME	LENGTH	HEIGHT	NOS
A (INDUSTRIAL BUILDING)	D2	0.74	2.10	02
A (INDUSTRIAL BUILDING)	D2	0.80	2.10	68
A (INDUSTRIAL BUILDING)	D2	0.90	2.10	01
A (INDUSTRIAL BUILDING)	D	0.90	2.10	04
A (INDUSTRIAL BUILDING)	D	0.91	2.10	03
A (INDUSTRIAL BUILDING)	D	0.92	2.10	03
A (INDUSTRIAL BUILDING)	D2	0.99	2.10	02
A (INDUSTRIAL BUILDING)	D2	1.07	2.10	04
A (INDUSTRIAL BUILDING)	D	1.07	2.10	02
A (INDUSTRIAL BUILDING)	D2	1.10	2.10	04
A (INDUSTRIAL BUILDING)	D	1.15	2.10	01
A (INDUSTRIAL BUILDING)	D2	1.16	2.10	02
A (INDUSTRIAL BUILDING)	D2	1.18	2.10	01
A (INDUSTRIAL BUILDING)	D2	1.20	2.10	02
A (INDUSTRIAL BUILDING)	D	1.48	2.10	01
A (INDUSTRIAL BUILDING)	D	1.50	2.10	01
A (INDUSTRIAL BUILDING)	D	2.11	2.10	01
A (INDUSTRIAL BUILDING)	D	2.13	2.10	21
A (INDUSTRIAL BUILDING)	D	2.14	2.10	01
A (INDUSTRIAL BUILDING)	D	2.40	2.10	06
A (INDUSTRIAL BUILDING)	D	3.33	2.10	02
A (INDUSTRIAL BUILDING)	D	5.48	2.10	01

SCHEDULE OF WINDOW/VENTILATION:

BUILDING NAME	NAME	LENGTH	HEIGHT	NOS
A (INDUSTRIAL BUILDING)	V	1.80	1.20	03
A (INDUSTRIAL BUILDING)	W1	1.84	1.20	107
A (INDUSTRIAL BUILDING)	W1	2.03	1.20	04
A (INDUSTRIAL BUILDING)	W2	2.29	1.20	02
A (INDUSTRIAL BUILDING)	V2	2.40	1.20	02
A (INDUSTRIAL BUILDING)	W1	2.45	1.20	04
A (INDUSTRIAL BUILDING)	V	2.45	1.20	03
A (INDUSTRIAL BUILDING)	W2	2.45	1.20	02
A (INDUSTRIAL BUILDING)	V	2.52	1.20	01
A (INDUSTRIAL BUILDING)	V	2.54	1.20	02
A (INDUSTRIAL BUILDING)	V	2.66	1.20	01
A (INDUSTRIAL BUILDING)	V	2.96	1.20	08
A (INDUSTRIAL BUILDING)	W1	3.00	1.20	38
A (INDUSTRIAL BUILDING)	V	3.05	1.20	07
A (INDUSTRIAL BUILDING)	V	3.28	1.20	01
A (INDUSTRIAL BUILDING)	V	3.54	1.20	01
A (INDUSTRIAL BUILDING)	V	3.56	1.20	02
A (INDUSTRIAL BUILDING)	V	3.57	1.20	01
A (INDUSTRIAL BUILDING)	V	3.69	1.20	01
A (INDUSTRIAL BUILDING)	V	3.93	1.20	01
A (INDUSTRIAL BUILDING)	V	4.02	1.20	01
A (INDUSTRIAL BUILDING)	V	4.19	1.20	01
A (INDUSTRIAL BUILDING)	W1	5.48	1.20	01
A (INDUSTRIAL BUILDING)	V	6.56	1.20	01
A (INDUSTRIAL BUILDING)	V	6.78	1.20	01

AREA STATEMENT JHARKHAND INDUSTRIAL AREA DEVELOPMENT AUTHORITY	VERSION NO.: 1.0.43	
	VERSION DATE: 29/04/2019	
PROJECT DETAIL:		
Region: JHARKHAND URBAN LOCAL BODIES	Plot Use: Industrial	
District: RANCHI	Plot SubUse: Industrial Building	
Authority: JHARKHAND INDUSTRIAL AREA DEVELOPMENT AUTHORITY	PlotNearbyReligiousStructure: NA	
Inward_No: JIADA/BP/0026/2019	Plot/SubPlot No: 24,22,22,52,52,46,01,28	
Application Type: General Proposal	North: -	
Project Type: Building Permission	South: -	
Nature of Development: New	East: -	
Location of Development Area: New Area	West: -	
AREA DETAILS:		SQ.MT.
AREA OF PLOT (Minimum)	(A)	26910.00
NET AREA OF PLOT(Gross Plot Area - Deduction from Gross Plot area)	(A-Deductions)	26910.00
Deduction for Balance Plot Area(from Gross Plot Area)		
Common Plot		3024.09
Total		3024.09
BALANCE AREA OF PLOT(Net Plot Area - Recreational/Amenity space)	(A-Deductions)	23885.91
PLOT AREA FOR COVERAGE(Net Plot Area)	(A-Deductions)	26910.00
Plot Area for FAR (Net Plot Area + Road/Widening Area)	(A-Deductions)	26910.00
COVERAGE CHECK		
Permissible Coverage area (50.00 %)		13455.00
Proposed Coverage Area (45.46 %)		12234.52
Total Prop. Coverage Area (45.46 %)		12234.52
Balance coverage area (4.54 %)		1220.48
FAR CHECK		
Perm. FAR Area (2.00)		53820.00
Total Perm. FAR area		53820.00
Industrial FAR		13328.13
Proposed FAR Area		13328.13
Total Proposed FAR Area		13328.13
Consumed FAR (Factor)		0.50
Balance FAR Area		40491.87
BUILT UP AREA CHECK		
Total Proposed BuiltUp Area		13328.13
ARCHITECT (Regd)		ZIA UR RAHMAN
ENGGINEER (Regd)		
SUPERVISOR (Regd)		
OWNER (Regd)		BEST LAN GARMENTS PVT.LTD. REPRESENTED BY RAJKUMAR RAMASAMY
DEVELOPMENT AUTHORITY		LOCAL BODY

Building :A (INDUSTRIAL BUILDING)

Floor Name	Gross Builtup Area	Deductions From Gross BUA(Area in Sq.mt.)	Total Built Up Area (Sq.mt.)	Proposed FAR Area (Sq.mt.)	Total FAR Area (Sq.mt.)	Total Consumed Additional FAR Area (Sq.mt.)	Tnmt (No.)
		Cutout		Industrial			
Ground Floor	13098.88	864.36	12234.52	12234.52	12234.52	12234.52	01
First Floor	11615.58	10521.97	1093.61	1093.61	1093.61	1093.61	01
Terrace Floor	0.00	0.00	0.00	0.00	0.00	0.00	00
Total :	24714.46	11386.33	13328.13	13328.13	13328.13	13328.13	02
Total Number of Same Buildings :	1						
Total :	24714.46	11386.33	13328.13	13328.13	13328.13	13328.13	02

FAR & Tenement Details (Table 4c-1)

Building	No. of Same Bldg	Gross Built Up Area (Sq.mt.)	Deductions From Gross BUA(Area in Sq.mt.)	Total Built Up Area (Sq.mt.)	Proposed FAR Area (Sq.mt.)	Total FAR Area (Sq.mt.)	Total Consumed Additional FAR Area (Sq.mt.)	Tnmt (No.)
			Cutout		Industrial			
A (INDUSTRIAL BUILDING)	1	24714.46	11386.33	13328.13	13328.13	13328.13	13328.13	02
Grand Total :	1	24714.46	11386.33	13328.13	13328.13	13328.13	13328.13	02

Buildingwise Floor FAR Details

Floor Name	Building Name		Total	
	A (INDUSTRIAL BUILDING)			
	Proposed Built Up Area (Sq.mt.)	Proposed FAR Area (Sq.mt.)	Total Proposed Built Up Area (Sq.mt.)	Total FAR Area (Sq.mt.)
Ground Floor	12234.52	12234.52	12234.52	12234.52
First Floor	1093.61	1093.61	1093.61	1093.61
Terrace Floor	0.00	0.00	0.00	0.00
Total :	13328.13	13328.13	13328.13	13328.13

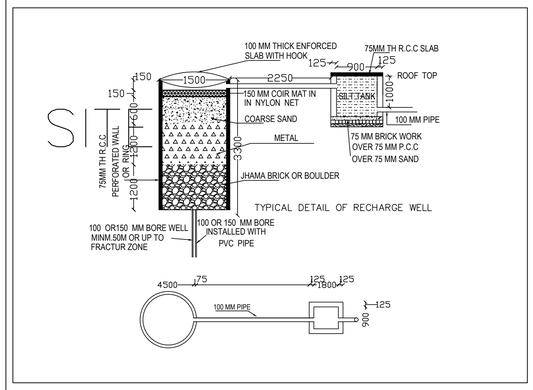

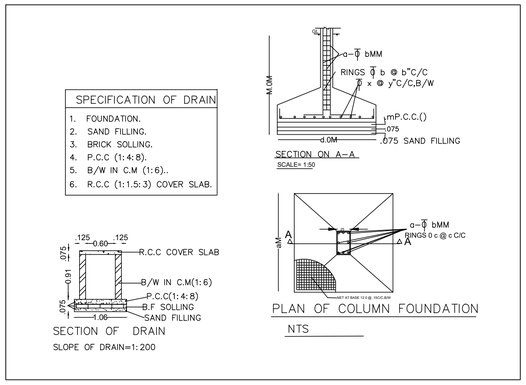

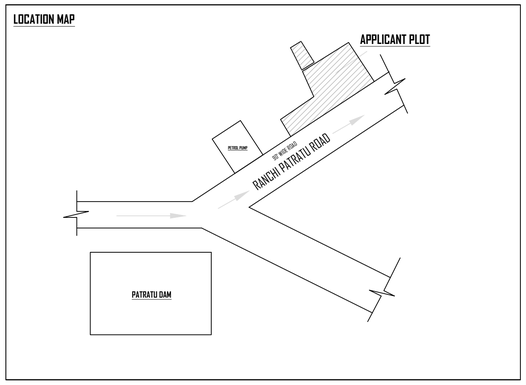

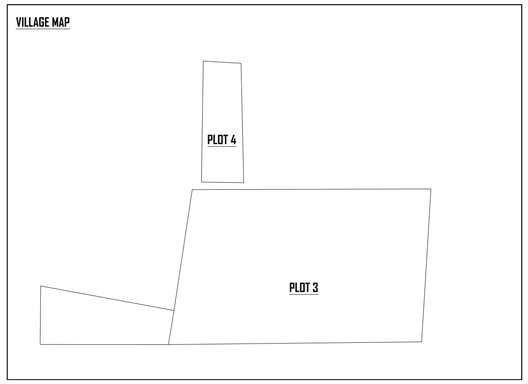

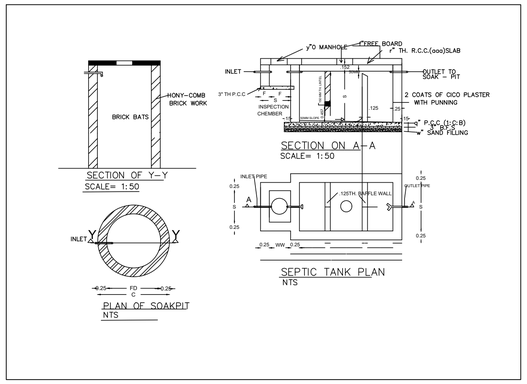

UnitBUA Table for Building :A (INDUSTRIAL BUILDING)

FLOOR	Name	UnitBUA Type	UnitBUA Area	Carpet Area	No. of Rooms	No. of Tenement
GROUND FLOOR PLAN	OTHER	GODOWN	12234.52	12233.98	58	1
FIRST FLOOR PLAN	OTHER	GODOWN	939.06	939.01	15	1
Total:	-	-	13173.58	13172.99	73	2

Building USE/SUBUSE Details

Building Name	Building Use	Building SubUse	Building Structure
A (INDUSTRIAL BUILDING)	Industrial	Industrial Building	Non-Highrise

COLOR INDEX

- PLOT BOUNDARY
- ABUTTING ROAD
- PROPOSED CONSTRUCTION
- COMMON PLOT
- ROAD WIDENING AREA
- EXISTING (To be retained)
- EXISTING (To be demolished)

LTP NAME AND SIGNATURE	STRUCTURAL ENG'S NAME AND SIGNATURE	BUILDER NAME AND SIGNATURE	DIGITAL SIGNATURE
ZIA UR RAHMAN JIADA/ARC/0002/2018			

ISO_A1_(841.00_x_594.00_MM)

This is system generated MAP. No need to Physically Signed.

Project Title :industrial building

DATE	06-02-2020
SHEET NO.	2
	-

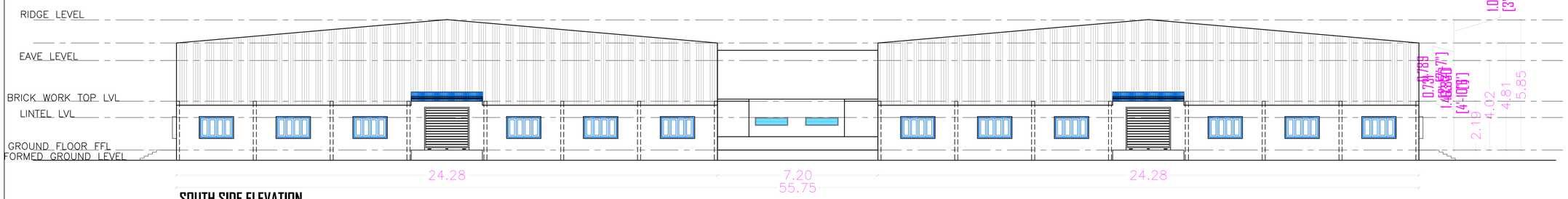

SOUTH SIDE ELEVATION

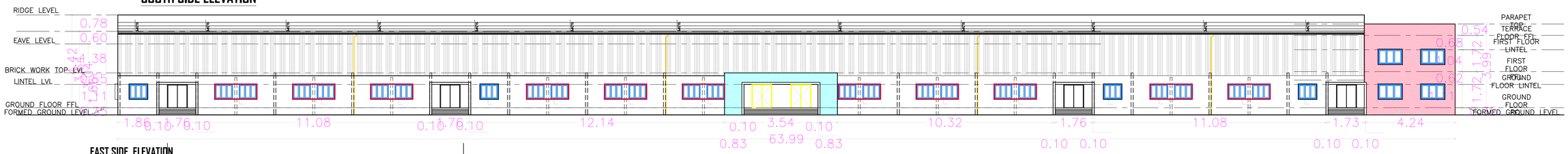

EAST SIDE ELEVATION

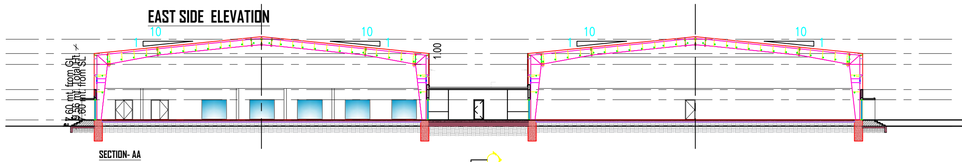

SECTION- AA

SECTION- DD

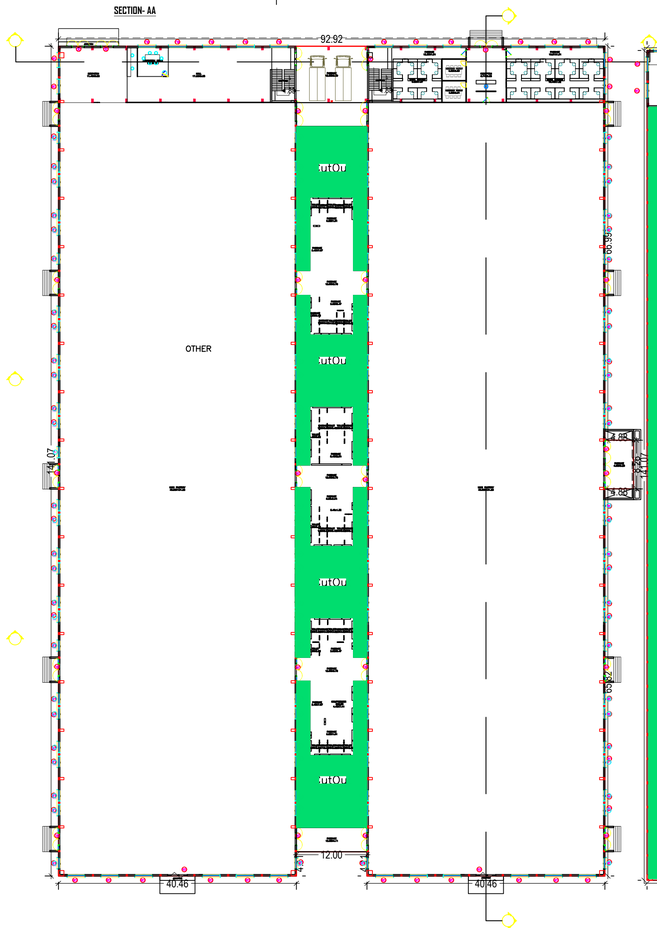

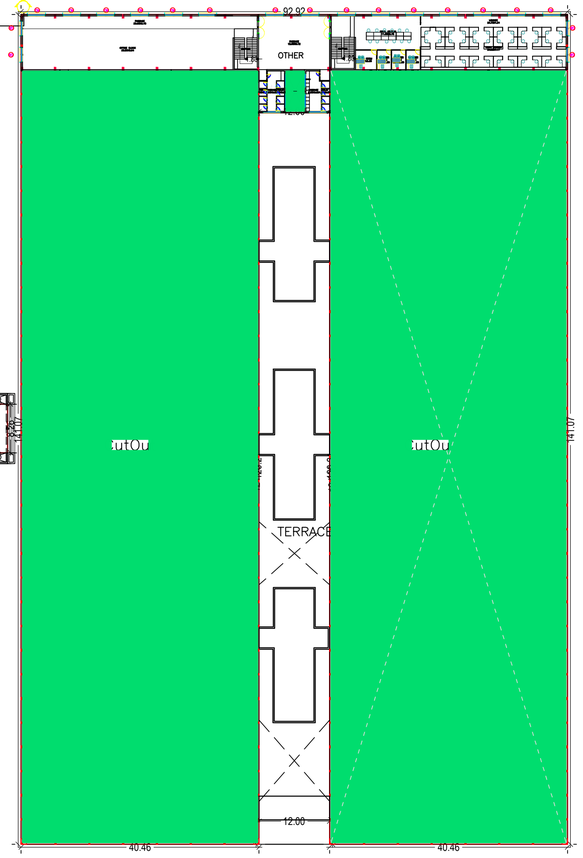

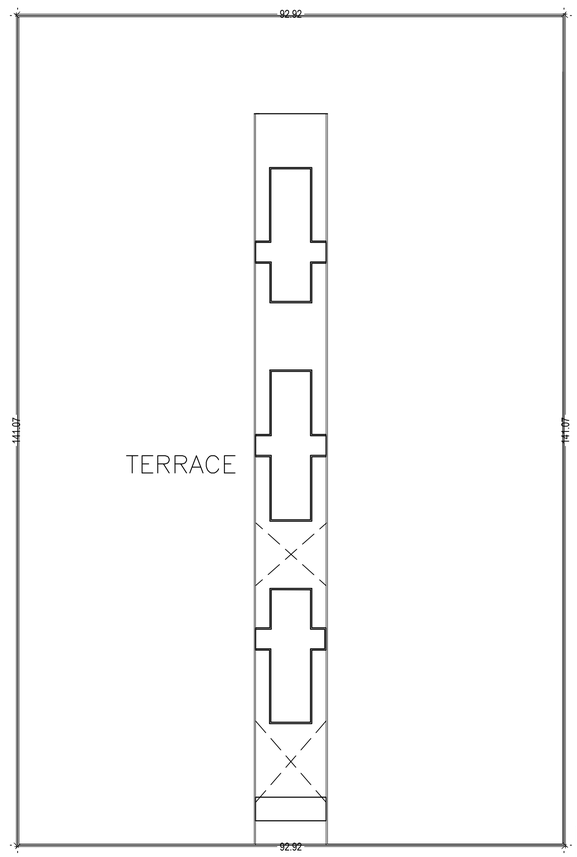

Proposal Basic Information

Proposal File No.	JIADA/BP/0026/2019
Owner Name	BEST LAN GARMENTS PVT.LTD. REPRESENTED BY RAJKUMAR RAMASAMY
Khata No	24,22,22,52,52,46,01,28
Plot No	24,22,22,52,52,46,01,28
Village Name	Uchring
Use	Industrial
SubUse	Industrial Building

LTP NAME AND SIGNATURE	STRUCTURAL ENG'S NAME AND SIGNATURE	BUILDER NAME AND SIGNATURE	DIGITAL SIGNATURE
ZIA UR RAHMAN JIADA/ARC/0002/2018			

ISO_A1_(841.00_x_594.00_MM)

This is system generated MAP. No need to Physically Signed.