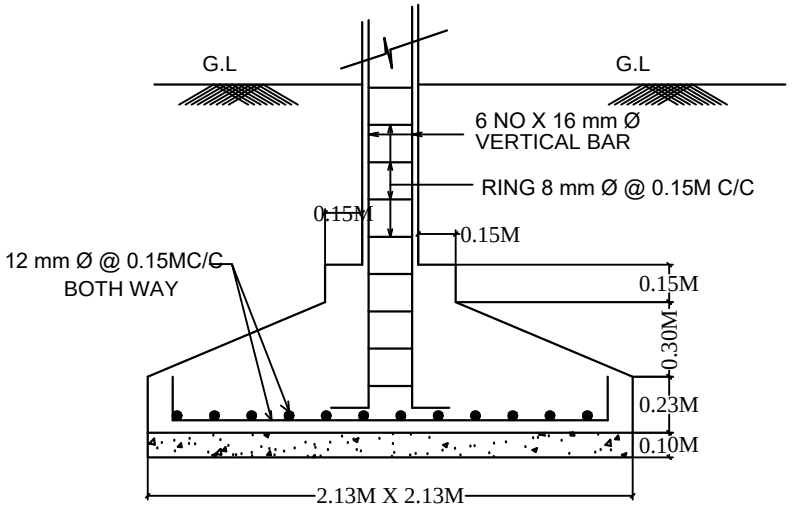

SECTION OF FOOTING .

SIZE - 2.13M X 2.13M

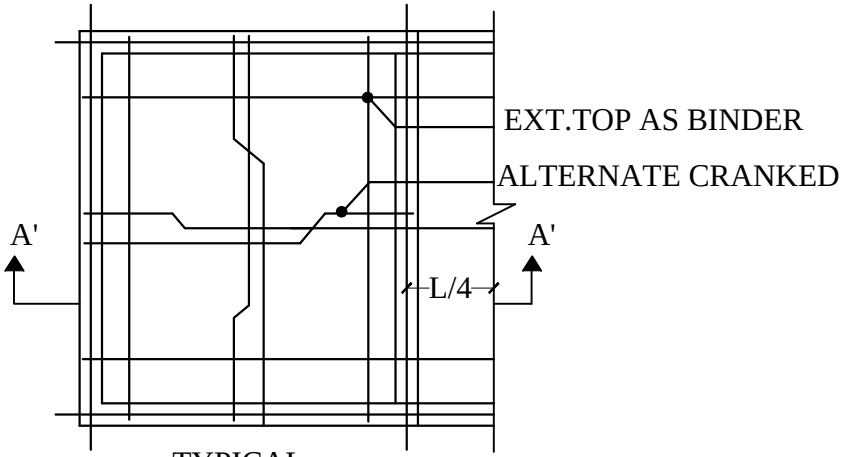

TYPICAL

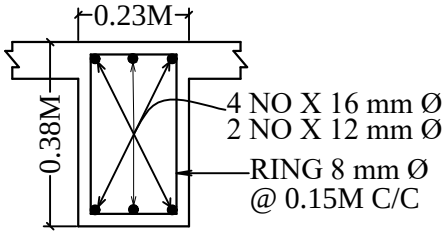

C.S. OF ROOF BEAM

SIZE - 0.23M X 0.38M

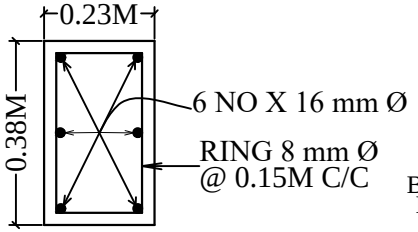

C.S. OF COLUMN .

SIZE - 0.23M X 0.38M

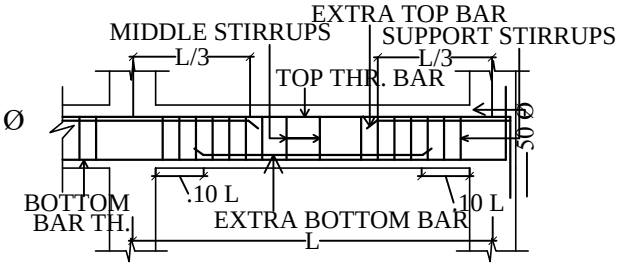

SECTION OF TYPICAL FLOOR BEAM

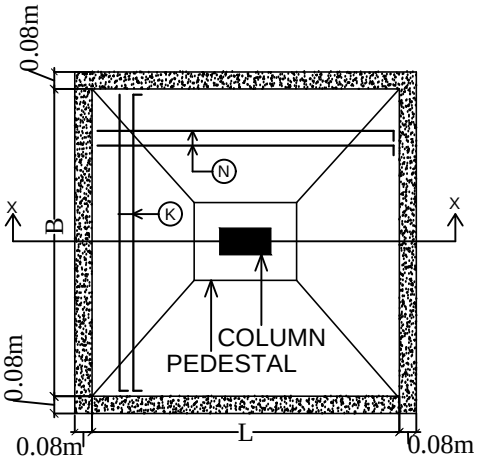

PLAN OF ISOLATED FOOTING

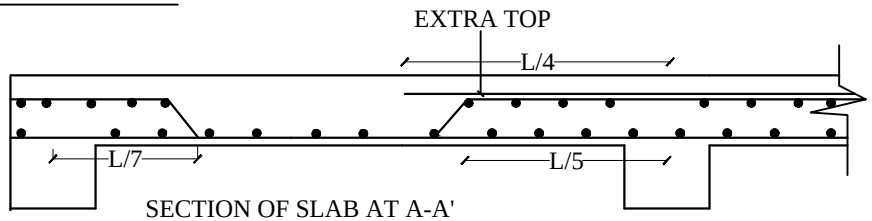

SECTION OF SLAB AT A-A'

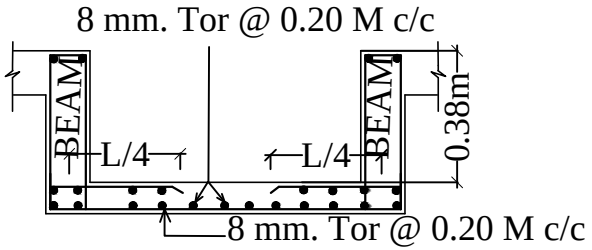

THICKNESS OF SLAB = 0.11m