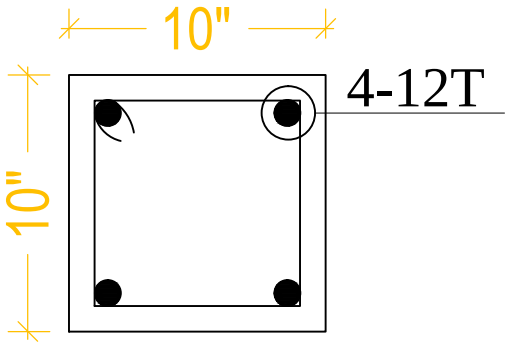

(10"X10")
8T Strips @6" c/c

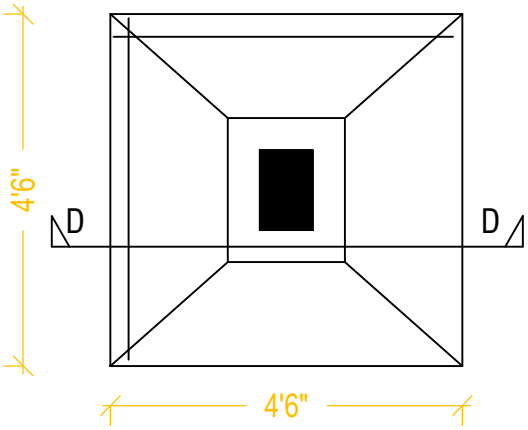

FOUNDATION
COL.(10"X10")

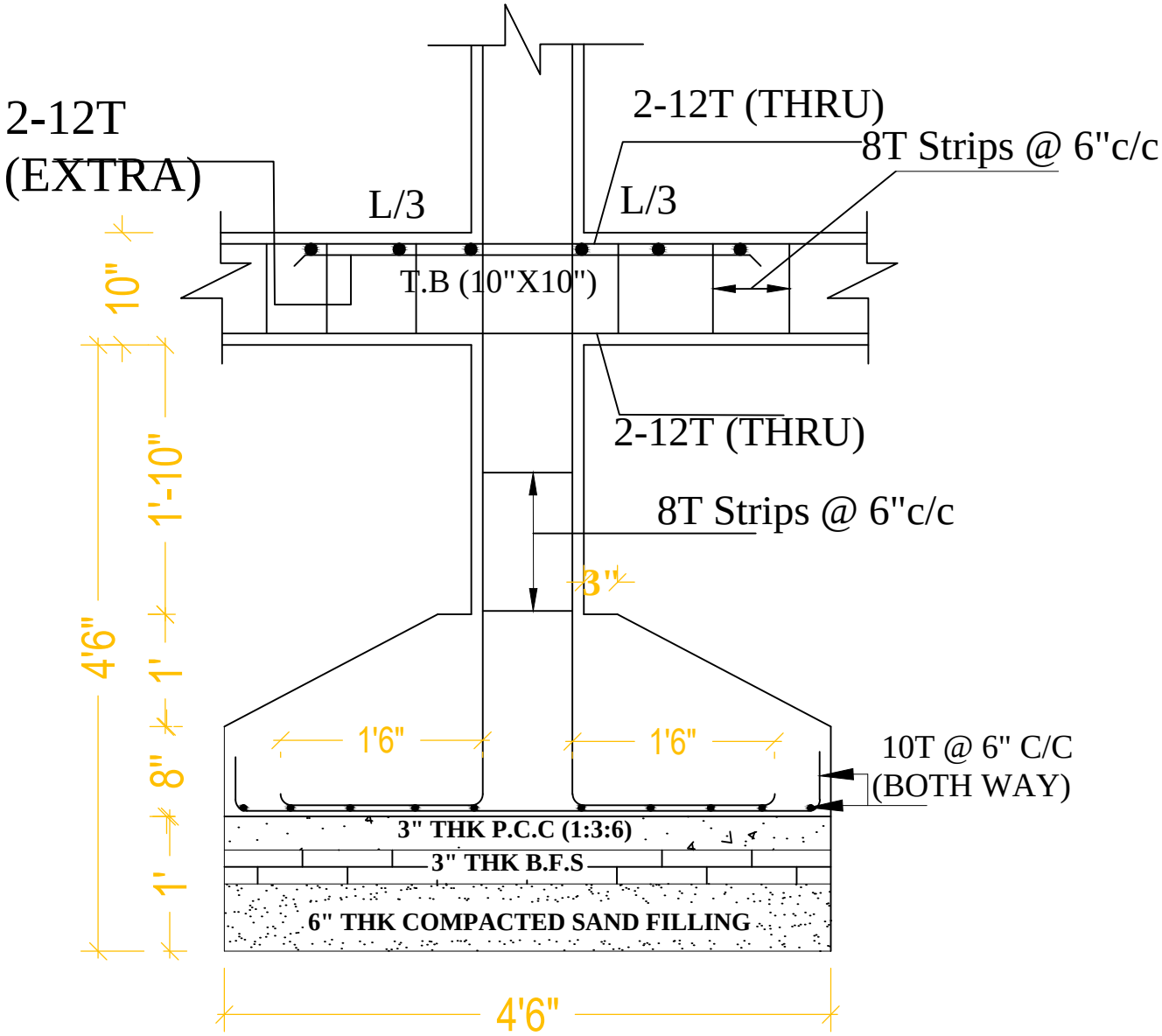

SECTION - D-D

Structure Detail