Project Title :Mr.BASILA WARE HOUSE

DATE	16-04-2024
SHEET NO.	1
.	

Proposal Basic Information

Proposal File No.	RZP/BP/0019/2023
Owner Name	REBATI RAMAN AND SAJJAN KUMAR AGARWAL
Khata No	62
Plot No	197
Village Name	BASILA
Use	Storage
SubUse	WareHouse

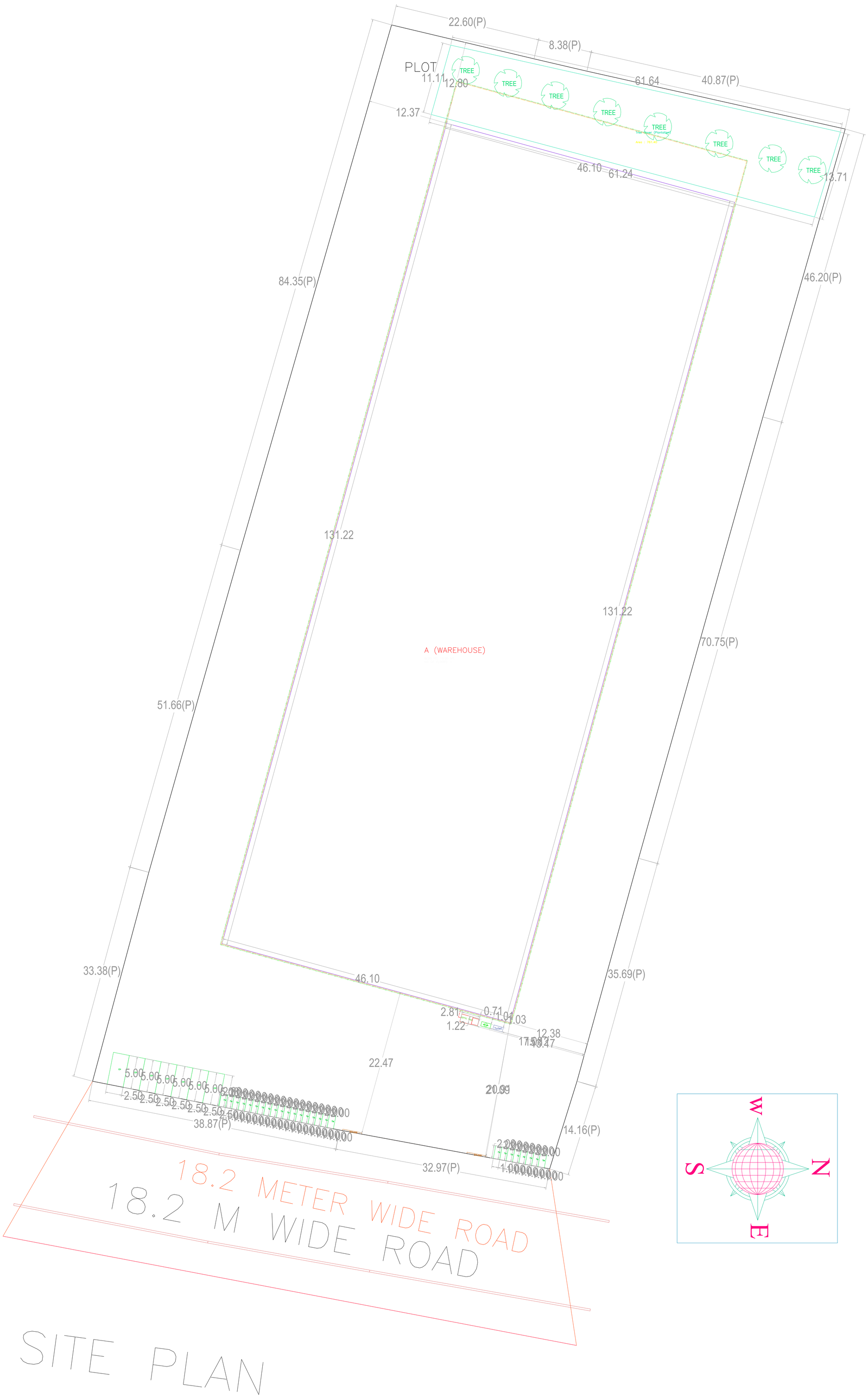

SITE PLAN

SITE

AREA STATEMENT RANCHI ZILA PARISHAD	VERSION NO.: 1.0.70	
	VERSION DATE: 16/10/2020	
PROJECT DETAIL:		
Region: JHARKHAND URBAN LOCAL BODIES	Plot Use: Storage	
District: RANCHI	Plot SubUse: WareHouse	
Authority: RANCHI ZILA PARISHAD	PlotNearbyReligiousStructure: NA	
Inward_No: RZP/BP/0019/2023	Plot/SubPlot No: 197	
Application Type: General Proposal	North: -	
Project Type: Building Permission	South: -	
Nature of Development: New	East: -	
Location of Development Area: New Area	West: -	
AREA DETAILS:		SQ.MT.
AREA OF PLOT (Minimum)	(A)	12100.49
NET AREA OF PLOT(Gross Plot Area - Deduction from Gross Plot area)	(A-Deductions)	12100.49
Deduction for Balance Plot Area(from 'Gross Plot Area)		
Common Plot		761.40
Total		761.40
BALANCE AREA OF PLOT (Net Plot Area - Recreational/Amenity space)	(A-Deductions)	11339.09
PLOT AREA FOR COVERAGE(Net Plot Area)	(A-Deductions)	12100.49
Plot Area for FAR (Net Plot Area + Road/Widening Area)	(A-Deductions)	12100.49
COVERAGE CHECK		
Permissible Coverage area (50.00 %)		6050.25
Proposed Coverage Area (49.99 %)		6049.21
Total Prop. Coverage Area (49.99 %)		6049.21
Balance coverage area (0.01 %)		1.04
FAR CHECK		
Perm. FAR Area (2.000)		24200.98
Total Perm. FAR area		24200.98
Special FAR		6049.21
Proposed FAR Area		6049.21
Total Proposed FAR Area		6049.21
Consumed FAR (Factor)		0.50
Balance FAR Area		18151.77
BUILT UP AREA CHECK		
Total Proposed BuiltUp Area		6049.21
ARCHITECT (Regd)		ZIA UR RAHMAN
ENGGINEER (Regd)		
SUPERVISOR (Regd)		
OWNER (Regd)		REBATI RAMAN AND SAJJAN KUMAR AGARWAL
DEVELOPMENT AUTHORITY		LOCAL BODY

COLOR INDEX

- PLOT BOUNDARY
- ABUTTING ROAD
- PROPOSED CONSTRUCTION
- COMMON PLOT
- ROAD WIDENING AREA
- EXISTING (To be retained)
- EXISTING (To be demolished)

Buildingwise Floor FAR Details

Floor Name	Building Name A (WAREHOUSE) Proposed Built Up Area (Sq.mt.)	Proposed FAR Area (Sq.mt.)	Total Total Proposed Built Up Area (Sq.mt.)	Total FAR Area (Sq.mt.)
Ground Floor	6049.21	6049.21	6049.21	6049.21
Total :	6049.21	6049.21	6049.21	6049.21

Building USE/SUBUSE Details

Building Name	Building Use	Building SubUse	Building Structure
A (WAREHOUSE)	Storage	WareHouse	Non-Highrise

Required Parking(Table 7a)

Building Name	Type	SubUse	Area (Sq.mt.)	Units Reqd.	Units Prop.	Car Reqd./Unit	Car Reqd.	Car Prop.	Two/Wheeler Reqd./Unit	Two/Wheeler Reqd.	Two/Wheeler Prop.
A (WAREHOUSE)	Storage	WareHouse	> 0	600	6049.21	1	7	-	-	-	-
			> 0	600	6049.21	-	-	-	1	22	-
	Total :		-	-	-	-	7	7	-	22	26

Parking Check (Table 7b)

Vehicle Type	Reqd. No.	Reqd. Area	Prop. No.	Prop. Area
Car	-	-	7	87.50
Total Car	7	87.50	7	87.50
TwoWheeler	-	-	26	52.00
Total TwoWheeler	22	44.00	26	52.00
Total	131.50		191.50	

FAR & Tenement Details (Table 4c-1)

Building	No. of Same Bldg	Total Built Up Area (Sq.mt.)	Proposed FAR Area (Sq.mt.) Storage	Total FAR Area (Sq.mt.)	Total Consumed Additional FAR Area (Sq.mt.)
A (WAREHOUSE)	1	6049.21	6049.21	6049.21	6049.21
Grand Total :	1	6049.21	6049.21	6049.21	6049.21

LTP NAME AND SIGNATURE	STRUCTURAL ENG'S NAME AND SIGNATURE	BUILDER NAME AND SIGNATURE	DIGITAL SIGNATURE
ZIA UR RAHMAN RZP/ARC/0011/2018			

ISO_full_bleed_2A0_(1189.00_x_1682.00_MM)

This is system generated MAP. No need to Physically Signed.

Project Title :Mr.BASILA WARE HOUSE

DATE	16-04-2024
SHEET NO.	2
.	

Proposal Basic Information

Proposal File No.	RZP/BP/0019/2023
Owner Name	REBATI RAMAN AND SAJJAN KUMAR AGARWAL
Khata No	62
Plot No	197
Village Name	BASILA
Use	Storage
SubUse	WareHouse

Building :A (WAREHOUSE)

Floor Name	Total Built Up Area (Sq.mt.)	Proposed FAR Area (Sq.mt.)	Total FAR Area (Sq.mt.)	Total Consumed Additional FAR Area (Sq.mt.)
		Storage		
Ground Floor	6049.21	6049.21	6049.21	6049.21
Total :	6049.21	6049.21	6049.21	6049.21
Total Number of Same Buildings	1			
Total :	6049.21	6049.21	6049.21	6049.21

SCHEDULE OF DOOR:

BUILDING NAME	NAME	LENGTH	HEIGHT	NOS
A (WAREHOUSE)	RS	3.05	2.50	15

SCHEDULE OF WINDOW/VENTILATION:

BUILDING NAME	NAME	LENGTH	HEIGHT	NOS
A (WAREHOUSE)	MECH VENT.	1.80	1.20	03

UnitBUA Table for Building :A (WAREHOUSE)

FLOOR	Name	UnitBUA Type	UnitBUA Area	Carpet Area	No. of Rooms	No. of Tenement

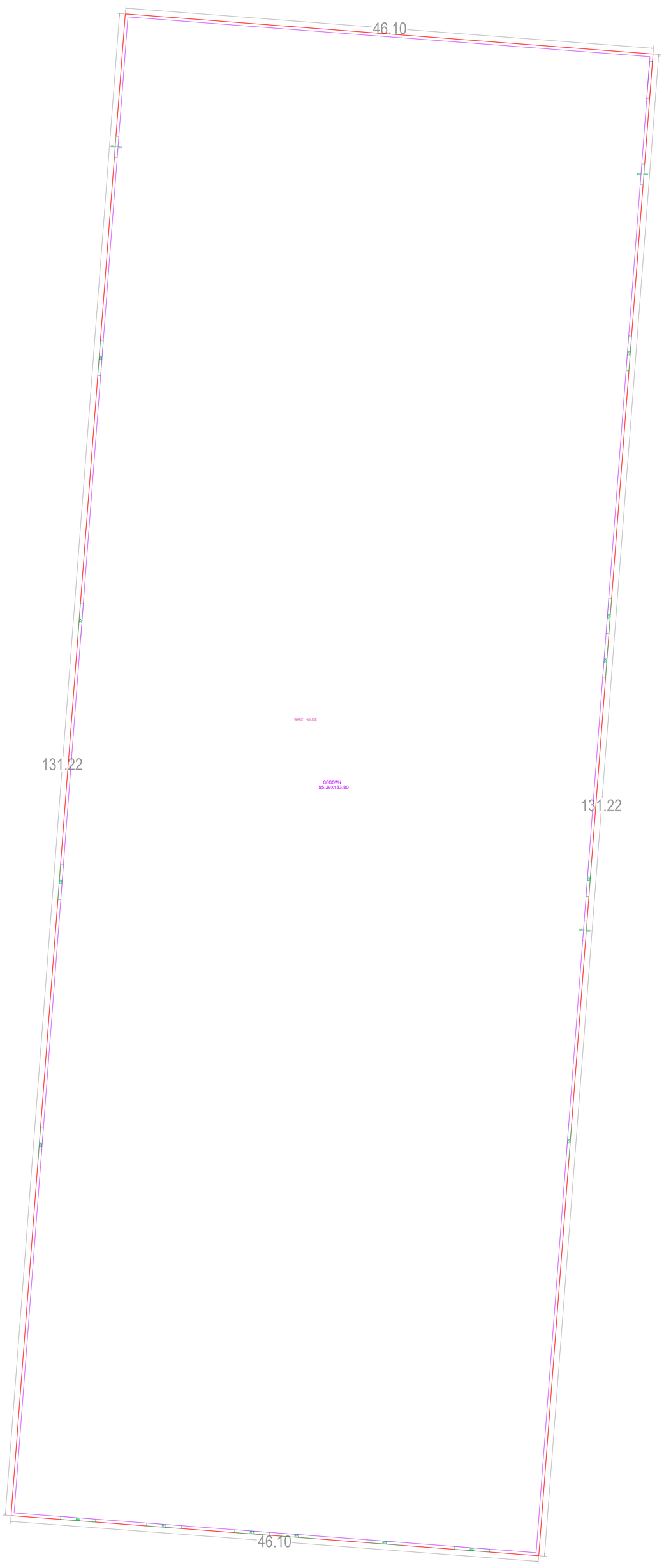

GROUND FLOOR PLAN
(Proposed)
(SCALE 1:100)

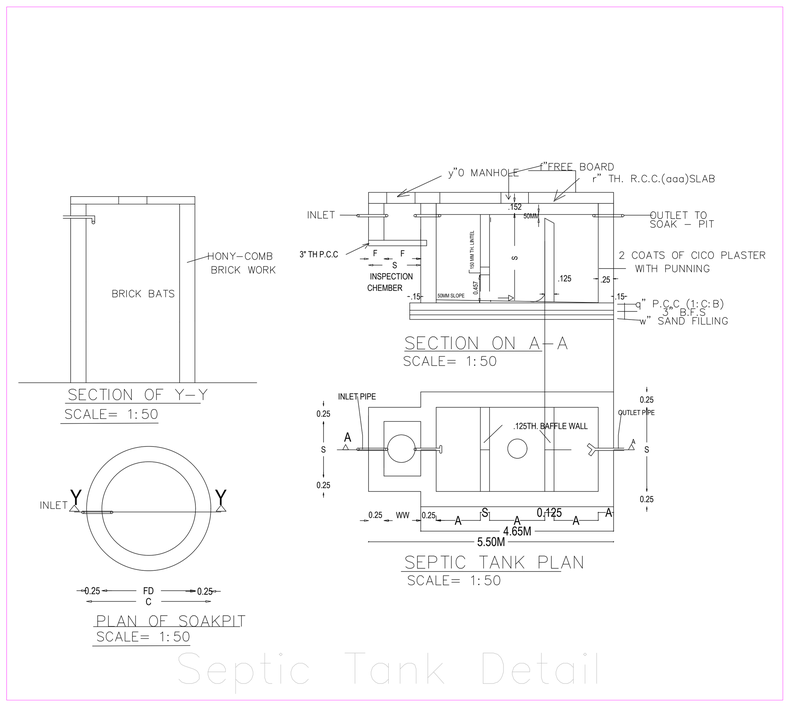

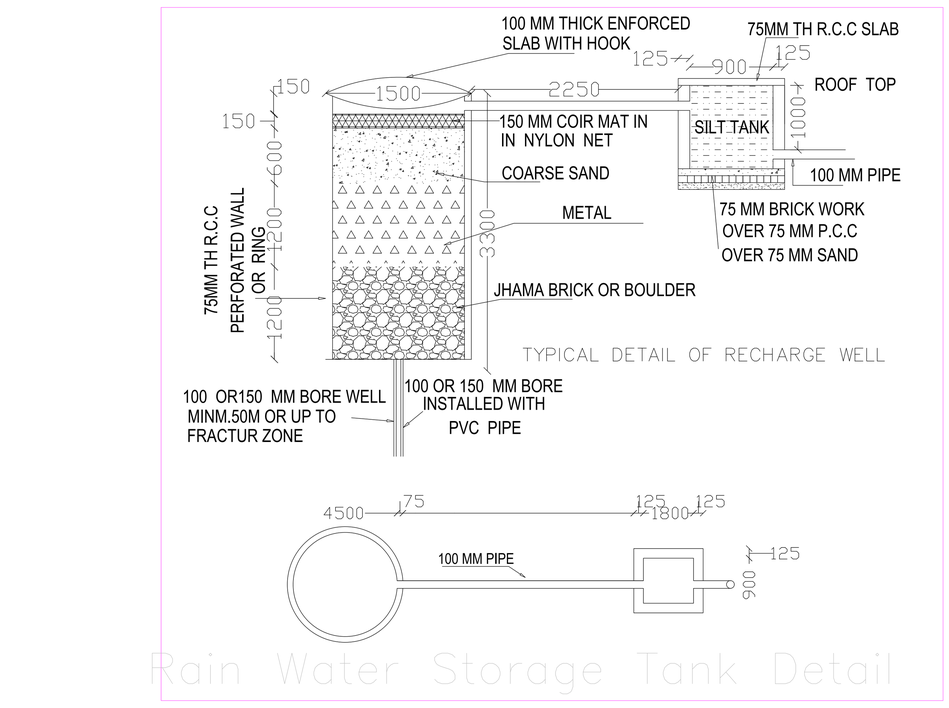

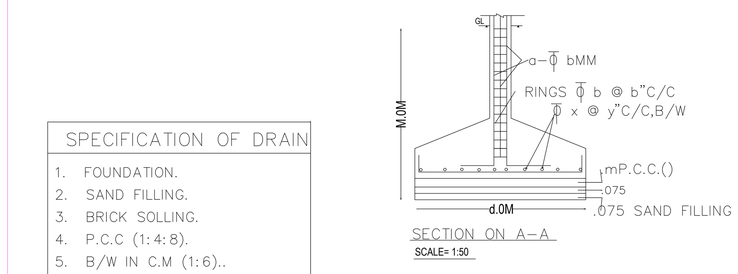

SPECIFICATION OF DRAIN

1. FOUNDATION.
2. SAND FILLING.
3. BRICK SOLLING.
4. P.C.C (1:4:8).
5. B/W IN C.M (1:6)..
6. R.C.C (1:1.5:3) COVER SLAB.

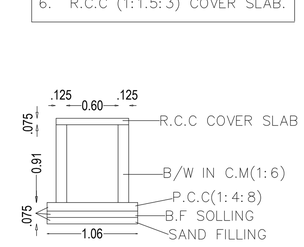

SECTION OF DRAIN
SLOPE OF DRAIN=1:200

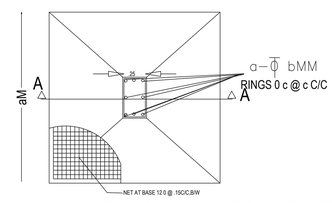

PLAN OF COLUMN FOUNDATION
SCALE= 1:50

Structure Detail

SPECIFICATION

1. D.P.C 1:2:4 +2 / CICO.
2. COLUMN &FOOTING R.C.C (1:1.5:3).
3. BEAMS, SLAB & LINTEL R.C.C(1:1.5:3:)
4. WALLS:- BRICKWORK IN C.M 1:6.
5. WINDOWS:-FULLY GLAZEDSTEEL CASEMENT.
6. DOORS:-35MM TH. FLUSH DOORS.
7. PLASTER:-1/2" TH. PLASTER ON WALL 1:6.
8. WALL FINISH :-DRY DISTEMPER ON INSIDE SNOWCEM ON OUTSIDE.
9. FLOORING:-vitrified/ceramic tiles.
10. WIRING:-CONCEALED COPPER WIRING.

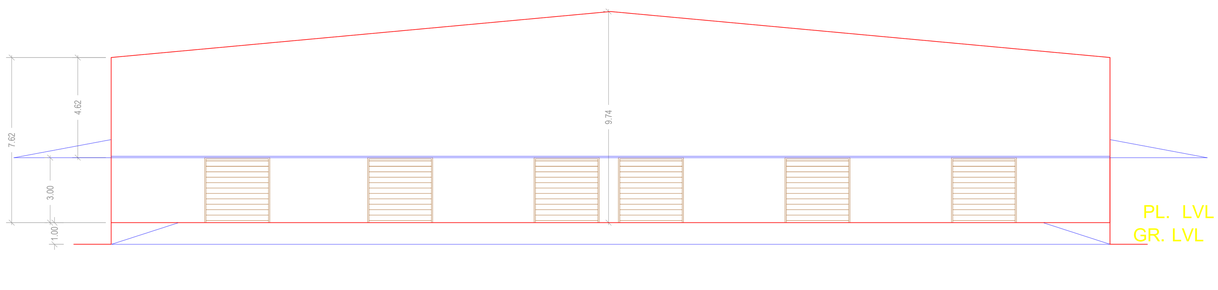

FRONT ELEVATION

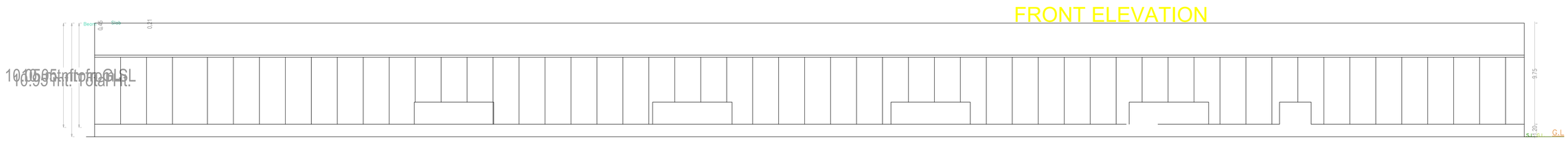

SECTION-A-A

SIDE ELEVATION

LTP NAME AND SIGNATURE	STRUCTURAL ENG'S NAME AND SIGNATURE	BUILDER NAME AND SIGNATURE	DIGITAL SIGNATURE
ZIA UR RAHMAN RZP/ARC/0011/2018			

ISO_full_bleed_2A0_(1189.00_x_1682.00_MM)

This is system generated MAP. No need to Physically Signed.