Project Title :SHAKUNTALA KHATRI

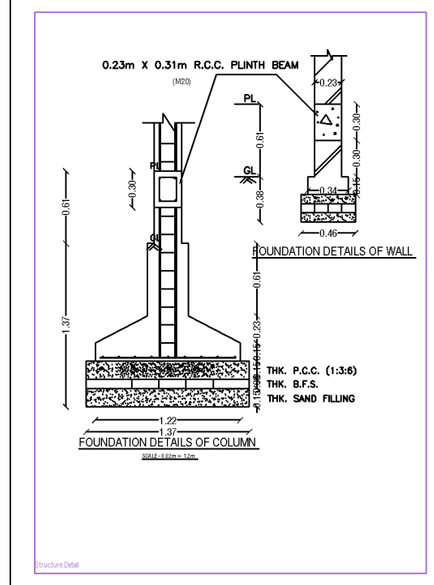

Structure Detail

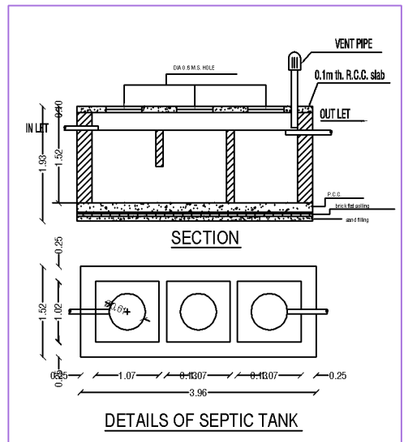

Septic Tank Detail

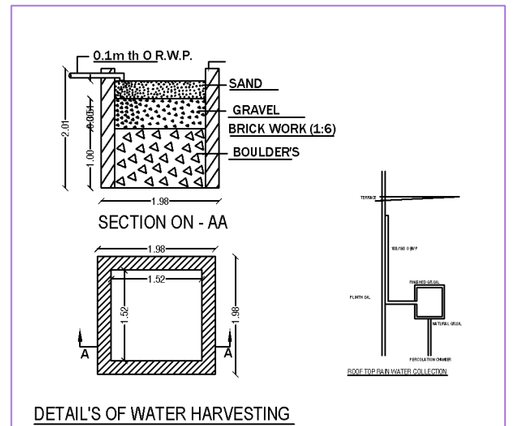

Rain Water Storage Tank Detail

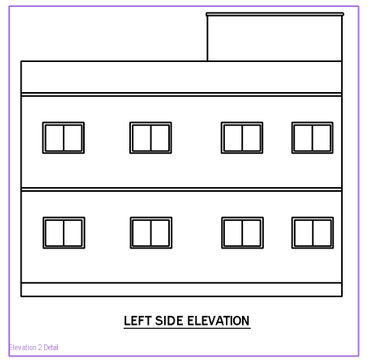

Elevation 2 Detail

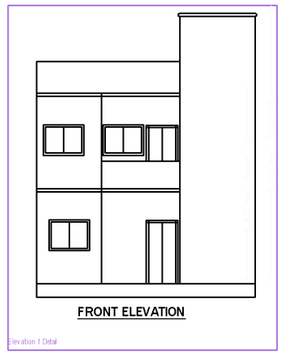

Elevation 1 Detail

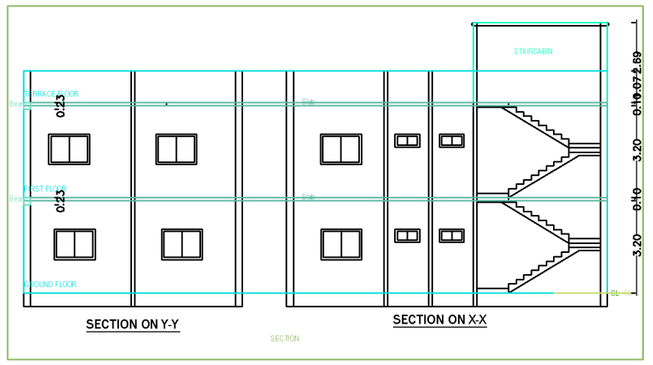

SECTION

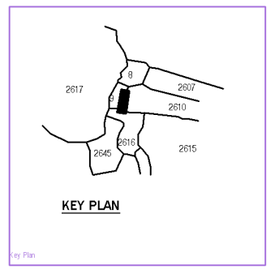

Key Plan

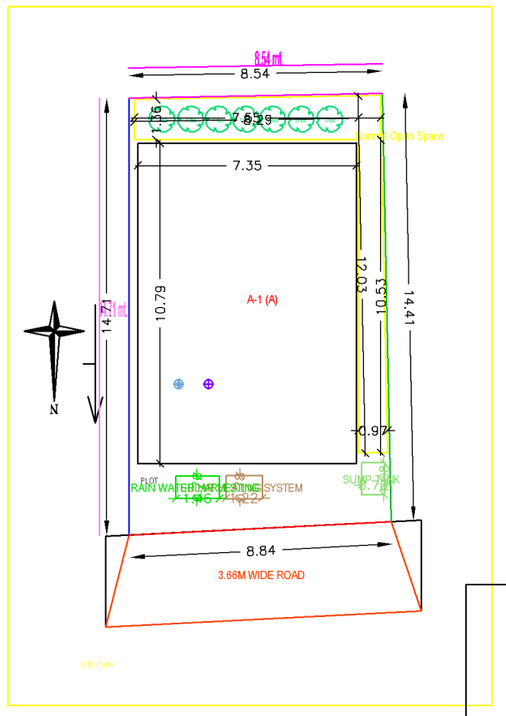

SITE PLAN

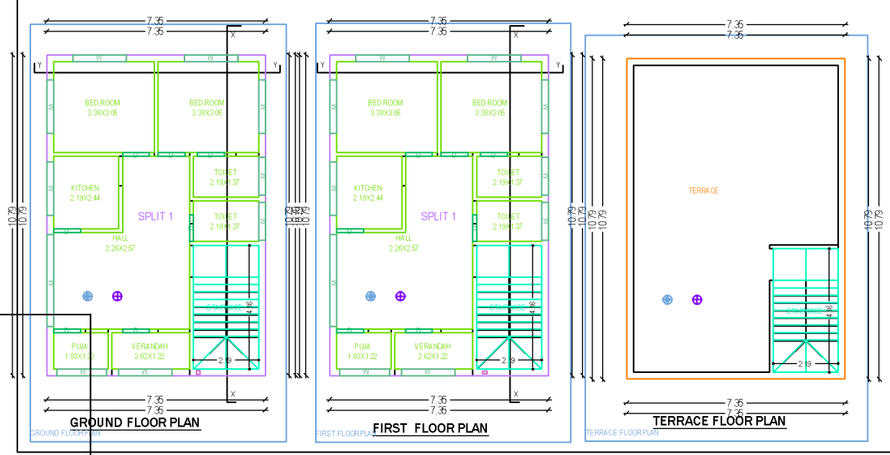

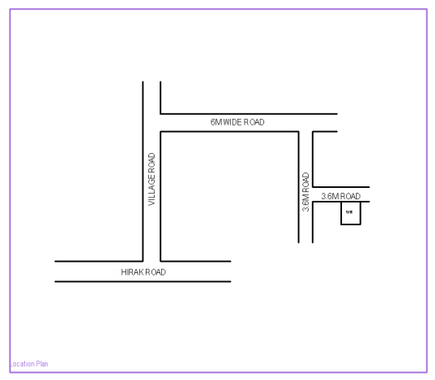

Location Plan

NORTH DIRECTION

BRIEF SPECIFICATION

FOUNDATION :- R.C.C. (1:1.5:3) Column footing foundation.
PLINTH :- 12"th R.C.C. (1:1.5:3) all round on plinth level.
FLOORING :- 1.5"th Marble. flooring over 3"th P.C.C. (1:3:6).
SUPER STRUCTURE :- First class brick work in cement mortar (1:6).
SLAB,BEAM, stairs & LINTEL :- All R.C.C. work (1:1.5:3).
WOOD WORK :- All door & window frames of sal wood
PLASTERING :- 12mm cement plaster (1:6) both side.

AREA STATEMENT

AREA OF THE LAND--------- (AS PER DEED)	133.59 SQM
AREA OF THE LAND--------- (AS PER SITE)	126.76 SQM
GROUND FLOOR AREA---	79.28 SQM
FIRST FLOOR AREA--	79.28 SQM
TOTAL COVERED AREA------	158.56 sqm
% OF PLINTH AREA--------	62.5 %
F. A R :----------	1.25

TITLE OF DRAWING

PLAN OF PROPOSED RESIDENTIAL BUILDING OF SMT SHAKUNTALA KHATRI W/O SRI SOMNATH KHATRI UNDER MOUZA : BARAPICHRI , 86 , PLOT NO. 2609 , 2610 , 2616 , KHATA NO. : 128 , IN THE DIST. OF DHANBAD

SIGNATURE OF OWNER

SIGNATURE OF ENGINEER

PROJECT DETAIL	
Award_No : -	Plot Use : Residential
Region : JHARKHAND URBAN LOCAL BODIES	Plot SubUse : Bungalow/ Dwelling / Non Apartment
District : DHANBAD	Land Use Zone : Residential
Application Type : General Proposal	Abutting Road Width : -
Project Type : Building Permission	Plot No. :
Nature of Development : New	Revenue Survey No/Survey No : -
Location : Old Area	Thana No : -
Sub Location : NA	Holding No : -
Village/Mauza Name : -	Khata No : -
Ward No : -	North : -
Road/Street : -	South : -
	East : -
	West : -

AREA DETAILS:		SQ.MT
AREA OF PLOT (Minimum)	(A)	126.43
Net Plot Area (Gross Plot Area - Deduction from Gross Plot area)	(A-Deductions)	126.43
Deductions for Balance Plot Area (from Gross Plot Area)		
COP Area		21.04
Total		21.04
Balance Plot Area (Net Plot Area - Recreational/Amenity space)	(A-Deductions)	105.39
Plot Area for Coverage (Net Plot Area)	(A-Deductions)	126.43
Plot Area for FSI (Net Plot Area + Road Widening Area)	(A-Deductions)	126.43
COVERAGE CHECK:		
Proposed Coverage Area (62.71 %)		79.28
Total Coverage Area (62.71 %)		79.28
FAR CHECK:		
Proposed Area of FAR		158.56
Total Area of FAR		158.56
BUILT UP AREA CHECK:		
Total Proposed Built Up Area		158.56
ARCH / ENGG / SUPERVISOR (Regd)	OWNER	
DEVELOPMENT AUTHORITY	**LOCAL BODY**	

COLOR INDEX

- PLOT BOUNDARY
- ABUTTING ROAD
- PROPOSED WORK (COVERAGE AREA)
- EXISTING (To be retained)
- EXISTING (To be demolished)

Color Index:

MARGIN DETAIL:

Building / Wing Name	Road Name	Front Margin	Rear Margin	Side1 Margin	Side2 Margin
A-1 (A)	3.66M WIDE ROAD	2.01	1.52	0.30	0.91

FAR & Tenement Details (Table 4c-1)

Building	No. of Same Bldg	Total Built Up Area (Sq.mt.)	Proposed FAR Area (Sq.mt.) Res.	Total FAR Area (Sq.mt.)	Tnmt (No.)
A (A)	1	158.56	158.56	158.56	01
Grand Total :	1	158.56	158.56	158.56	01

Building : A (A)

Floor Name	Total Built Up Area (Sq.mt.)	Proposed FAR Area (Sq.mt.) Res.	Total FAR Area (Sq.mt.)	Tnmt (No.)
Ground Floor	79.28	79.28	79.28	01
First Floor	79.28	79.28	79.28	00
Terrace Floor	0.00	0.00	0.00	00
Total:	158.56	158.56	158.56	01
Total Number of Same Buildings	1			
Total:	158.56	158.56	158.56	01

SCHEDULE OF JOINERY:

BUILDING NAME	NAME	LENGTH	HEIGHT	NOS
A (A)	D	0.90	2.10	14
Total :		-	-	14

SCHEDULE OF JOINERY:

BUILDING NAME	NAME	LENGTH	HEIGHT	NOS
A (A)	W	1.27	1.20	04
A (A)	W	1.68	1.20	02
A (A)	W	1.80	1.20	12
A (A)	W	3.09	1.20	02
Total :		-	-	20

UnitBUA Table for Building :A (A)

FLOOR	Name	UnitBUA Type	UnitBUA Area	Carpet Area	No. of Rooms	No. of Tenement
GROUND FLOOR PLAN	SPLIT 1	FLAT	158.56	158.52	6	1
Total :	-	-	158.56	158.52	6	1