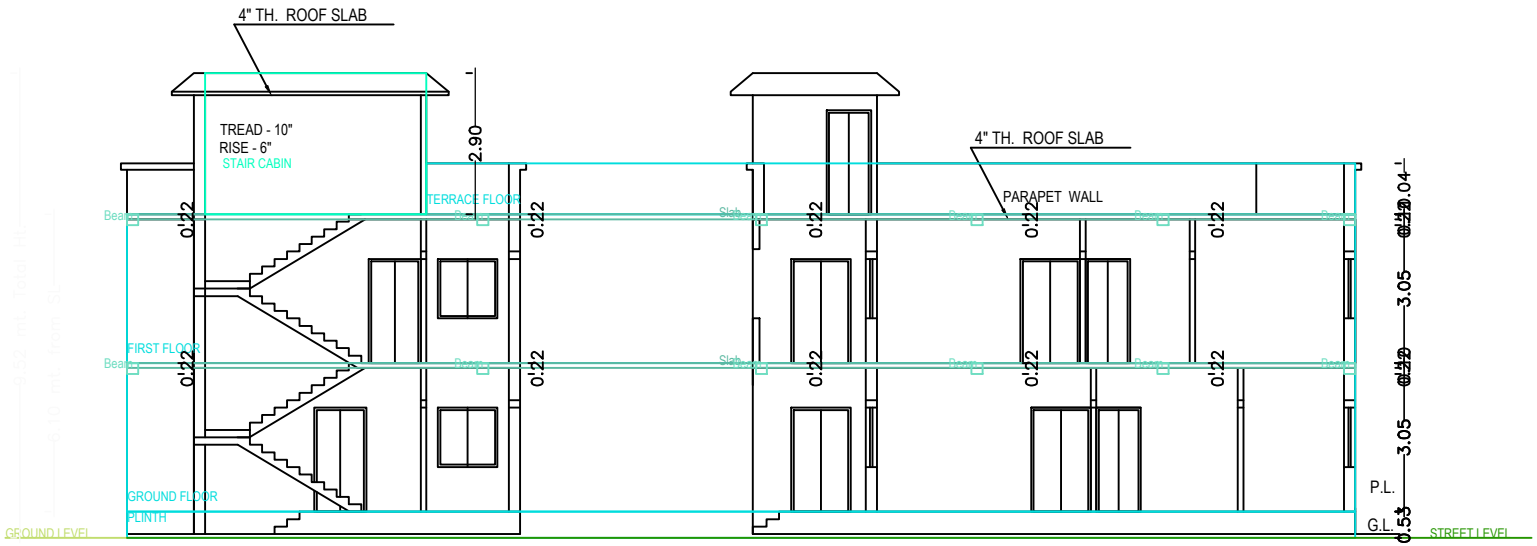

SECTION X-X

SECTION Y-Y

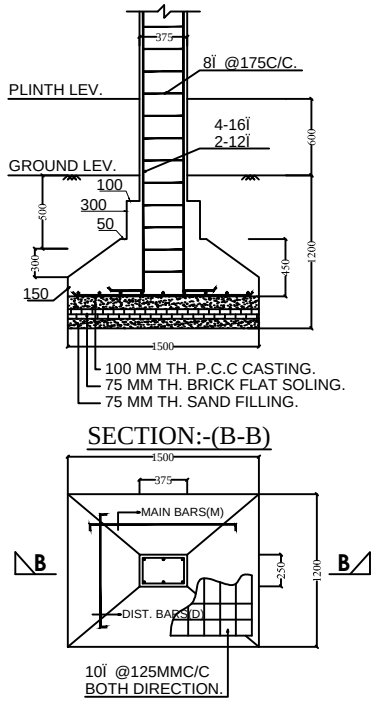

SECTION:-(B-B)

FOUNDATION PLAN OF CLOUMN

SECTION

STRUCTURE DETAIL