Project Title : SMT. NEETU SINGH

DATE	22-03-2021
SHEET NO.	1

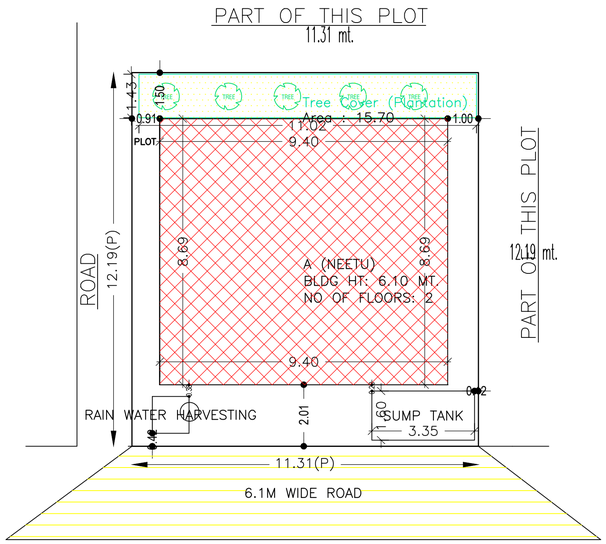

SITE PLAN

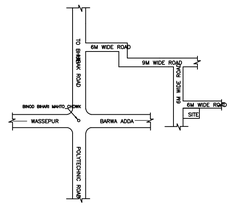

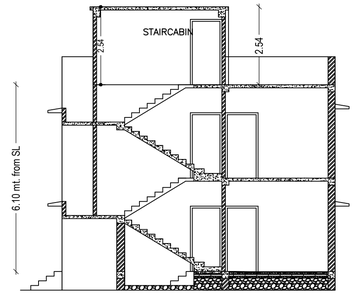

SECTION ON X–X

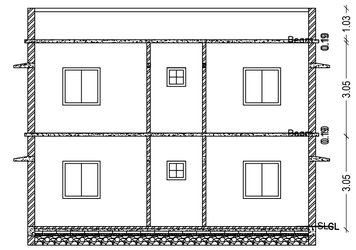

SECTION – YY'

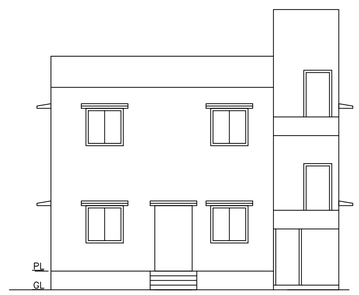

FRONT ELEVATION

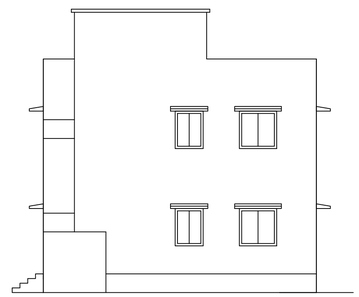

RIGHT ELEVATION

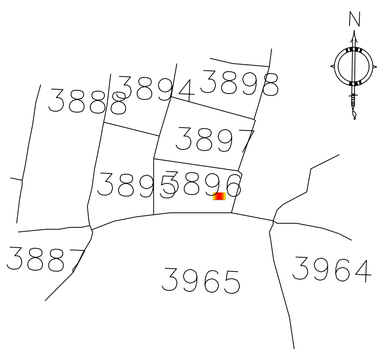

SCHEDULE OF DOOR:

BUILDING NAME	NAME	LENGTH	HEIGHT	NOS
A (NEETU)	D	0.76	2.10	02
A (NEETU)	D	0.90	2.10	06
A (NEETU)	D	0.91	2.10	03
A (NEETU)	D	1.03	2.10	02
A (NEETU)	D	1.22	2.10	01

SCHEDULE OF WINDOW/VENTILATION:

BUILDING NAME	NAME	LENGTH	HEIGHT	NOS
A (NEETU)	W	0.61	1.20	02
A (NEETU)	W	0.91	1.20	04
A (NEETU)	W	1.22	1.20	12
A (NEETU)	W	1.80	1.20	02
A (NEETU)	W	1.82	1.20	01
A (NEETU)	W	2.43	1.20	01

FAR & Tenement Details (Table 4c–1)

Building	No. of Same Bldg	Total Built Up Area (Sq.mt.)	Proposed FAR Area (Sq.mt.) Resi.	Total FAR Area (Sq.mt.)	Total Consumed Additional FAR Area (Sq.mt.)	Tnmt (No.)
A (NEETU)	1	163.36	163.36	163.36	163.36	01
Grand Total :	1	163.36	163.36	163.36	163.36	01

UnitBUA Table for Building :A (NEETU)

FLOOR	Name	UnitBUA Type	UnitBUA Area	Carpet Area	No. of Rooms	No. of Tenement
GROUND FLOOR PLAN	SPLIT 1	FLAT	163.36	161.44	6	1
FIRST FLOOR PLAN	SPLIT 1	FLAT	0.00	0.00	7	0
Total:	-	-	163.36	161.44	13	1

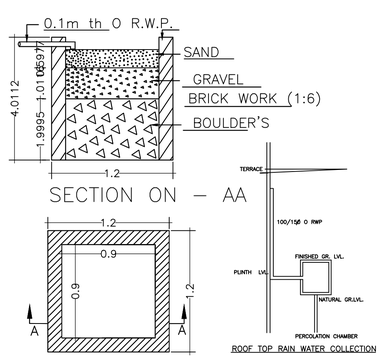

DETAIL'S OF WATER HARVESTING

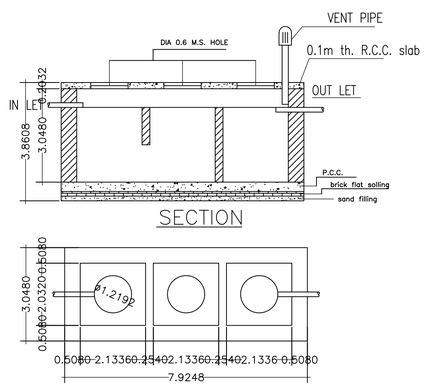

DETAILS OF SEPTIC TANK

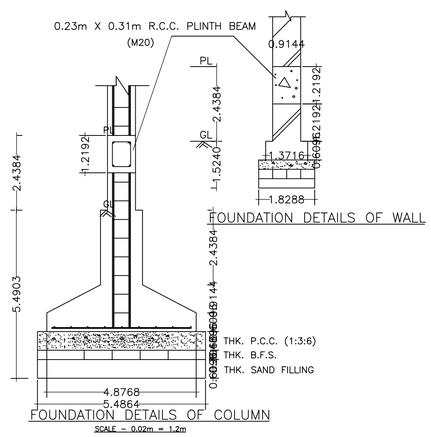

Proposal Basic Information

Proposal File No.	MADA/BP/0017/2021
Owner Name	SMT. NEETU SINGH
Khata No	OLD KHATA NO-14,NEW KHATA NO-42
Plot No	OLD PLOT NO. 2538, NEW PLOT NO. 3896
Village Name	Bara Pichari
Use	Residential
SubUse	Bungalow/ Dwelling / Non Apartment

AREA STATEMENT MINERAL AREA DEVELOMENT AUTHORITY	VERSION NO.: 1.0.54	
	VERSION DATE: 16/10/2020	
PROJECT DETAIL:		
Region: JHARKHAND URBAN LOCAL BODIES	Plot Use: Residential	
District: DHANBAD	Plot SubUse: Bungalow/ Dwelling / Non Apartment	
Authority: MINERAL AREA DEVELOMENT AUTHORITY	PlotNearbyReligiousStructure: NA	
Inward_No: MADA/BP/0017/2021	Plot/SubPlot No: OLD PLOT NO. 2538, NEW PLOT NO. 3896	
Application Type: General Proposal	North: Plot No. - SAME PLOT	
Project Type: Building Permission	South: Road Width - 6.1	
Nature of Development: New	East: Road Width - 6.1	
Location of Development Area: Old Area	West: Plot No. - SAME PLOT	
AREA DETAILS:		SQ.MT.
AREA OF PLOT (Minimum)	(A)	137.95
NET AREA OF PLOT(Gross Plot Area - Deduction from Gross Plot area)	(A-Deductions)	137.95
Deduction for Balance Plot Area(from Gross Plot Area)		
Common Plot		15.70
Total		15.70
BALANCE AREA OF PLOT(Net Plot Area - Recreational/Amenity space)	(A-Deductions)	122.25
PLOT AREA FOR COVERAGE(Net Plot Area)	(A-Deductions)	137.95
Plot Area for FAR (Net Plot Area + Road/Widening Area)	(A-Deductions)	137.95
COVERAGE CHECK		
Permissible Coverage area (70.00 %)		96.56
Proposed Coverage Area (59.21 %)		81.68
Total Prop. Coverage Area (59.21 %)		81.68
Balance coverage area (10.79 %)		14.88
FAR CHECK		
Perm. FAR Area (2.50)		344.88
Total Perm. FAR area		344.88
Residential FAR		163.36
Proposed FAR Area		163.36
Total Proposed FAR Area		163.36
Consumed FAR (Factor)		1.18
Balance FAR Area		181.52
BUILT UP AREA CHECK		
Total Proposed BuiltUp Area		163.36
ARCHITECT (Regd)		RAM PRATAP SINGH
ENGGINEER (Regd)		
SUPERVISOR (Regd)		
OWNER (Regd)		SMT. NEETU SINGH
DEVELOPMENT AUTHORITY		LOCAL BODY

COLOR INDEX

- PLOT BOUNDARY
- ABUTTING ROAD
- PROPOSED CONSTRUCTION
- COMMON PLOT
- ROAD WIDENING AREA
- EXISTING (To be retained)
- EXISTING (To be demolished)

Buildingwise Floor FAR Details

Floor Name	Building Name A (NEETU) Proposed Built Up Area (Sq.mt.)	Proposed FAR Area (Sq.mt.)	Total Total Proposed Built Up Area (Sq.mt.)	Total FAR Area (Sq.mt.)
Ground Floor	81.68	81.68	81.68	81.68
First Floor	81.68	81.68	81.68	81.68
Terrace Floor	0.00	0.00	0.00	0.00
Total :	163.36	163.36	163.36	163.36

Building USE/SUBUSE Details

Building Name	Building Use	Building SubUse	Building Structure
A (NEETU)	Residential	Residential Bldg/Apartment	Non-Highrise

Building :A (NEETU)

Floor Name	Total Built Up Area (Sq.mt.)	Proposed FAR Area (Sq.mt.) Resi.	Total FAR Area (Sq.mt.)	Total Consumed Additional FAR Area (Sq.mt.)	Tnmt (No.)
Ground Floor	81.68	81.68	81.68	81.68	01
First Floor	81.68	81.68	81.68	81.68	00
Terrace Floor	0.00	0.00	0.00	0.00	00
Total :	163.36	163.36	163.36	163.36	01
Total Number of Same Buildings :	1				
Total :	163.36	163.36	163.36	163.36	01

LTP NAME AND SIGNATURE	STRUCTURAL ENG'S NAME AND SIGNATURE	BUILDER NAME AND SIGNATURE	DIG
RAM PRATAP SINGH MADA/ARC/0024/2019			

Name : DILIP KUMAR
Designation : Managing Director
Organization : MINERAL AREA DEVELOPMENT AUTHORITY DHANBAD

ISO_A1_(841.00_x_594.00_MM)

This is system generated MAP. No need to sign.

Project Title : SMT. NEETU SINGH

DATE	22-03-2021
SHEET NO.	2

Proposal Basic Information

Proposal File No.	MADA/BP/0017/2021
Owner Name	SMT. NEETU SINGH
Khata No	OLD KHATA NO-14,NEW KHATA NO-42
Plot No	OLD PLOT NO. 2538, NEW PLOT NO. 3896
Village Name	Bara Pichari
Use	Residential
SubUse	Bungalow/ Dwelling / Non Apartment

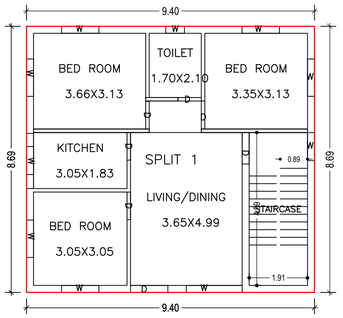

GROUND FLOOR PLAN
(Proposed)
(SCALE 1:100)

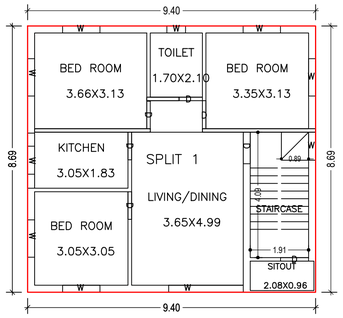

FIRST FLOOR PLAN
(Proposed)
(SCALE 1:100)

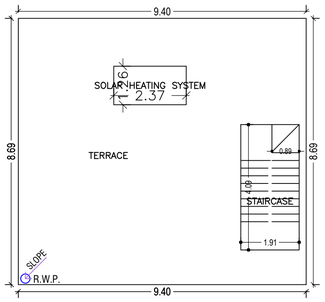

TERRACE FLOOR PLAN
(SCALE 1:100)

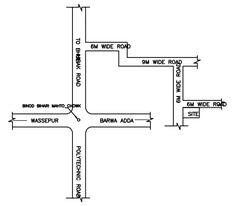

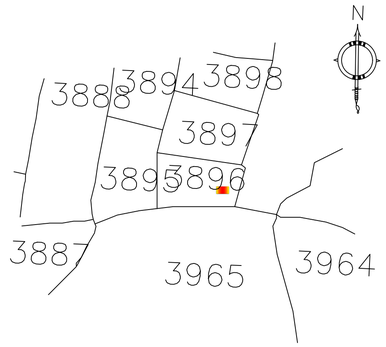

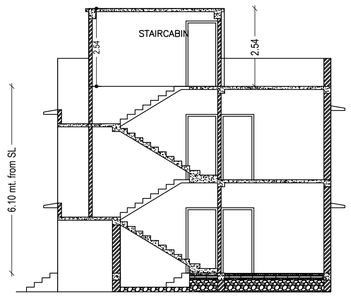

SECTION ON X–X

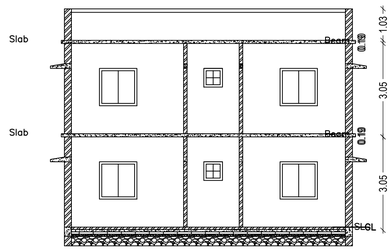

SECTION – YY'

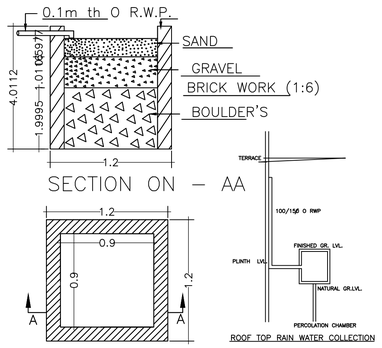

DETAIL'S OF WATER HARVESTING

FRONT ELEVATION

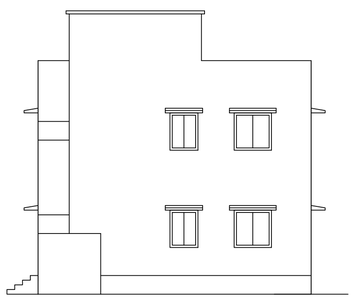

RIGHT ELEVATION

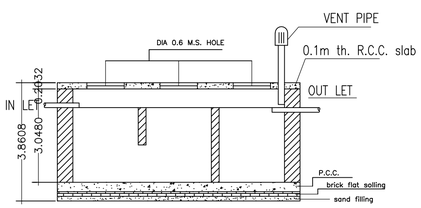

SECTION

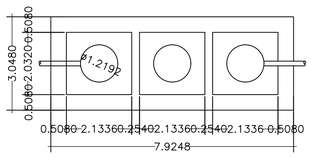

DETAILS OF SEPTIC TANK

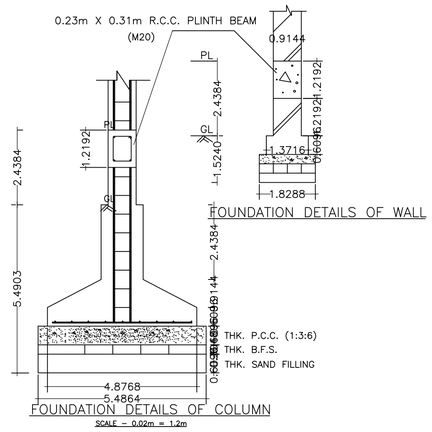

FOUNDATION DETAILS OF WALL

FOUNDATION DETAILS OF COLUMN

LTP NAME AND SIGNATURE	STRUCTURAL ENG'S NAME AND SIGNATURE	BUILDER NAME AND SIGNATURE	DIG
RAM PRATAP SINGH MADA/ARC/0024/2019			

Name : DILIP KUMAR
Designation : Managing Director
Organization : MINERS AREA DEVELOPMENT AUTHORITY DHANBAD

ISO_A1_(841.00_x_594.00_MM)

This is system generated MAP. No need to Put Sign.