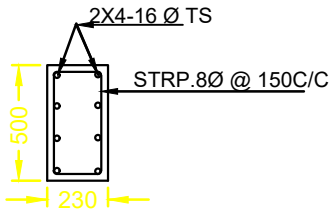

C/S OF COL.

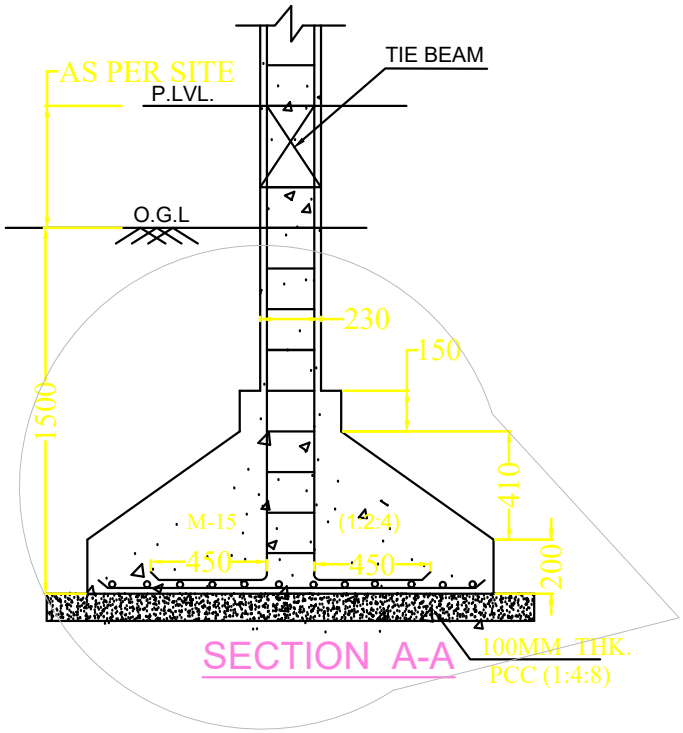

SECTION A-A

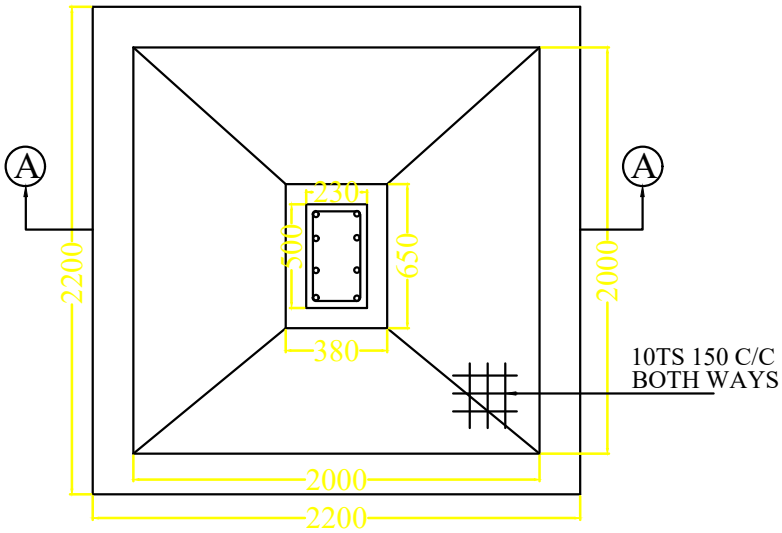

PLAN

FOOTING PLAN (AS/STRL. DESIGN)
SCALE N.T.S

Structure Detail